Village of Lincolnshire
One Olde Half Day Road, Lincolnshire, IL 60069
Ph: 847.883.8600 | Fax: 847.883.8608 | www.lincolnshireil.gov

AGENDA
COMMITTEE OF THE WHOLE MEETING
Village Hall – Board Room
Tuesday, October 13, 2015
Immediately following Regular Village Board Meeting

Reasonable accommodations / auxiliary aids will be provided to enable persons with disabilities to effectively participate in any public meetings of the Board. Please contact the Village Administrative Office (847.883.8600) 48 hours in advance if you need special accommodations to attend .

The Committee of the Whole will not proceed past 10:30 p.m. unless there is a consensus of the majority of the Trustees to do so. Citizens wishing to address the Board on agenda items may speak when the agenda item is open, prior to Board discussion.

CALL TO ORDER

1.0 **ROLL CALL**

2.0 **APPROVAL OF MINUTES**

2.1 Acceptance of the September 28, 2015 Committee of the Whole Meeting Minutes

3.0 **ITEMS OF GENERAL BUSINESS**

3.1 Planning, Zoning and Land Use

3.11 Consideration of a Zoning Board recommendation regarding a request to Rezone a 14+ acre lot from R1 Single-Family Residence District to R2A Single-Family Residence District, to permit the development of a 17-lot environmentally sensitive large lot subdivision at 1700 Riverwoods Road (Arthur J. Greene Construction Company)

3.2 Finance and Administration

3.21 Official Announcement of Estimated Amount to be Raised by Ad Valorem Taxes for the 2015 Tax Levy to be Collected in Fiscal Year 2016 (Village of Lincolnshire)

3.22 Consideration and Discussion of Amendment to Police Pension Funding Policy (Village of Lincolnshire)

3.3 Public Works

3.31 Consideration and Discussion of a Joint Purchasing Agreement with Compass Minerals Incorporated in the Amount of $28,176.00, and Cargill Incorporated in the Amount of $13,556.00, for the Purchase of Rock Salt for the 2015-2016 Winter Season (Village of Lincolnshire)

3.4 Public Safety

3.5 Parks and Recreation

3.6 Judiciary and Personnel

4.0 **UNFINISHED BUSINESS**

5.0 **NEW BUSINESS**

6.0 **EXECUTIVE SESSION**

7.0 **ADJOURNMENT**

Return to Agenda

Village of Lincolnshire
One Olde Half Day Road
Lincolnshire, IL 60069
www.lincolnshireil.gov

MINUTES
COMMITTEE OF THE WHOLE MEETING
Monday, September 28, 2015

Present:

~~Mayor Brandt~~
Trustee Grujanac
Trustee McDonough
Trustee McAllister
Village Attorney Simon
Chief of Police Kinsey
Public Works Director Woodbury
Trustee Feldman
Trustee Hancock
Trustee Servi
Village Clerk Mastandrea
~~Village Manager Burke~~
Treasurer/Finance Director Peterson
Community & Economic Development Director McNellis

ROLL CALL

Temporary Chair McDonough called the meeting to order at 7:16 p.m. and Village Clerk Mastandrea called the Roll.

2.0 APPROVAL OF MINUTES

2.1 Acceptance of the September 15, 2015 Committee of the Whole Minutes

The minutes of the September 15, 2015 Committee of the Whole Meeting were approved as submitted.

3.0 ITEMS OF GENERAL BUSINESS

3.1 Planning, Zoning and Land Use

3.11 Preliminary Evaluation of a proposed Amendment to the existing Phase II Tri-State International Office Center Planned Unit Development (PUD) to permit a proposed 116-room Aloft Hotel at 20 Westminster Way (Marko Jocic)

Community & Economic Development Director McNellis provided a summary of proposed amendment to Tri-State International planned unit development to permit an Aloft Hotel on the current vacant property located at 20 Westminster Way. If referred, this would go to the Architectural Review Board (ARB) for design review, and then a Public Hearing would take place to amend the Tri-State International Office Center Planned Unit Development. Community & Economic Development Director McNellis summarized the zoning exceptions necessary for this request related to height of the building and parking. Community & Economic Development Director McNellis summarized issues staff would like to bring forward for discussion during ARB and Zoning Board review.

Trustee Feldman ask for the height of the new CDW parking structure to use as a comparison. Community & Economic Development Director McNellis stated the CDW parking structure is approximately 50' – 60' and is in the same height range of the proposed building.

Mr. Joe Villanti, Principle of Baselab Architects, representing Marko Jocic provided a presentation related to the proposed Aloft Hotel and restaurant. Mr. Villanti noted the height of the building they are proposing is 55'. Community & Economic Development Director McNellis asked Mr. Villanti to confirm this since there is a discrepancy in the cover letter sent to staff from Marko Jocic. A brief discussion regarding the proposed building height followed.

Mr. Villanti continued his presentation showing photos of proposed rooms, elevations and the proposed restaurant to be located inside the hotel. Trustee McDonough asked if information on the restaurant occupant is known and can be shared with the Village Board. Ms. Donna Burris, daughter of George Jocic, stated the desire is to get a high end restaurant.

Trustee Hancock asked if the proposed is to be a W Hotel establishment and if so, where it ranks in line with other W Hotels. Ms. Burris stated Aloft Hotels are higher end business rank hotels. Community & Economic Development Director McNellis noted his opinion was the Aloft Hotel attracted a younger business clientele and would not compete with other hotels in the area.

Trustee McAllister asked why this location was being considered instead of the other location planned a few years ago. Mr. Villanti noted he was not familiar with the other location, and the Jocic family is completely on board for the current proposed location. Village Attorney Simon asked if Mr. Vallanti was familiar with the plans submitted for the previous Aloft Hotel in 2008. Mr. Villanti stated he is not familiar with the previous plans. Community & Economic Development Director McNellis stated staff would provide the previous plans to the petitioner.

Trustee Grujanac noted concern for the height of the building and parking. Community & Economic Development Director McNellis stated staff is recommending a parking study be done as part of the development review process.

Village Attorney Simon asked if the PUD called for detention on the site. Community & Economic Development Director McNellis stated the previous 36-unit condominium established detention and this was provided for offsite; the existing detention ponds account for stormwater needs for the entire PUD.

Trustee Hancock suggested landscaping be addressed to include more than what is on the proposed plan.

Trustee McDonough suggested the possibility of using the CDW parking garage to accommodate restaurant patrons since the hours of operation would differ. Mr. Villanti noted the Jocic family is open to discussions with CDW about using the parking facility and getting a letter of agreement to that effect in place. Trustee Feldman asked if it was possible to build a two tier parking structure. Mr. Villanti stated he did not think there would be a need for two tier parking.

There was a consensus of the Board to refer this to the Architectural Review Board for review and noted points to discuss by the ARB being architecture, vehicular circulation, parking, traffic study, and 50' verses 45' structure height.

3.2 Finance and Administration

3.21 Receipt and Consideration of Police Pension Fund Report (Village of Lincolnshire)

Mr. Steve Lee, resident appointee and President of the Police Pension Board introduced Mr. Jason Franken with Foster & Foster, Inc. the newly hired actuary firm for the Police Pension Fund.

Mr. Lee and Mr. Franken provided a detailed report on the status of the Police Pension Fund.

Trustee McAllister asked what the spread in age group is out of the 23 current participants and how this affects contributions. Mr. Franken noted no predictions are made regarding the future population of participants but just the number of current participants. Mr. Franken clarified that there are 40 participants; 23 active and 17 non-actives and his firm calculates the liabilities for the 40 total participants in the plan.

Trustee McAllister noted Lincolnshire is in very good shape and suggested Mr. Lee and Mr. Franken show the Board how Lincolnshire compares to other communities. Mr. Lee presented additional information showing Lincolnshire trends relative to other Police Pension Funds.

Trustee Hancock asked what the assumptions are regarding life expectancy. Mr. Franken stated life expectancy is the reason why the liabilities have increased significantly in the current year. Mr. Franken stated current life expectancy for males is approximately 81 – 82, and for females is 86. A brief conversation regarding life expectancy and how this is accounted for in the actuarial calculations followed.

Mr. Lee presented additional graphs illustrating financial condition of the Lincolnshire Police Pension Plan, contributions, and 10-year projections. Village Attorney Simon asked what salary increases were projected when figuring the 10-year projections. Mr. Franken stated there was a graded table assumption based on age used in the valuation projection.

Trustee Hancock asked how inflation is accounted for in the calculations, and does inflation affect the liabilities. Mr. Franken noted the inflation assumption is projected over a long period of time. Mr. Franken stated the cost of living adjustment for Tier 1 retirees is a fixed 3% so the inflation assumption does not apply. Tier 2 will be tied to the lesser of 3% or the rate of inflation.

Trustee Hancock asked how the Village will get comfortable with a 6.5% rate of return when current rates are much less. Mr. Lee noted this fund is long term. Trustee Hancock noted concerns in the next few years regarding funding ratio. Mr. Franken noted his valuation projects the appropriate Village contribution to the pension plan and limits the contribution requirements resulting from market volatility. Mr. Franken stated it is difficult to budget if the amount is constantly going up and down; for this reason, 6.5% is selected as the long term rate of return based on the asset allocation of the plan. A conversation regarding assumptions and rates of return followed. Trustee Hancock noted concern regarding the next few years projected rate of return versus reality and asked what it would take to get a 70% funding rate by the end of 2016. Mr. Franken stated it would take something unprecedented to get to 70%. Mr. Franken and Mr. Lee explained how the loss and gains work out to a smooth return of 6.5% rate of return.

Trustee McDonough asked if the change from 89% to 80% funding is due to a different mortality table. Mr. Franken confirmed the transition from the RP-2000 mortality table to RP-2010 is major contributor for the change in funding ratio. Trustee McDonough asked if they would be approving a change in one year for a mortality table based on many years. Mr. Franken noted the table they have adopted more appropriately reflects life expectancies today, and years from now the life expectancy is expected to be even longer. There is a lot of debate in the new RP-2014 mortality table, and Mr. Franken is not comfortable recommending its use at this time.

Finance Director Peterson noted the Board previously passed a Funding Policy in preparation of GASB67 Reporting. At the time the funding policy was approved, staff noted the Village Board should anticipate a policy amendment in 2015; which will be presented at the next meeting. The prior actuary wanted more flexibility to modify assumptions; however staff disagreed and recommended a funding policy with a detailed listing of assumptions be used. It was staff's intention to require the actuary to submit all future assumption changes and financial impacts to the Village Board for approval before implementing any changes to the Funding Policy. Foster & Foster's report includes a financial impact summary using the current assumptions versus the proposed change to the mortality table.

Trustee Hancock requested a list of the mutual funds invested to know what fees Lincolnshire Police Pension Fund is paying through this

process. Mr. Lee stated what was disclosed is what is mandated by the state to disclose, so formatting cannot change but a list can be provided. Mr. Lee noted the Department of Insurance puts restrictions on what can be invested and until fairly recently the Police Pension had to invest no more than 45% in equities; 55% had to be municipal bonds and treasuries. Only recently has the investments changed to allow for investing in corporates and increased amounts in equities.

Village Attorney Simon asked if the proposed change is a catch-up or will it be smoothed out in the next several years. Mr. Franken stated it is an immediate contribution catch-up going from what it was to where it is now and will continue to improve. There will be continuous updates to the table going forward.

Mr. Lee and Mr. Franken concluded the presentation with projected contributions, projected financial condition indictors, and reported Lincolnshire's funded status is ranked 4th compared to the 357 downstate police pension plans according to the Department of Insurance 2013 biennial study.

3.5 Parks and Recreation

Temporary Chair McDonough moved 3.51 up on the Agenda for discussion

3.51 Consideration and Discussion of Park Board Recommendation to Approve the Lincolnshire Sports Association (LSA) Request to Share LSA Summer Baseball Tournament Revenues with the Village of Lincolnshire (Lincolnshire Sports Association)

Public Works Director Woodbury provided a summary of the Park Board recommendation to approve the Lincolnshire Sports Association (LSA) request to share LSA summer baseball tournament revenues with the Village of Lincolnshire.

Mr. Lee Fell representing LSA provided additional information related to their request. Past funds donated by LSA to the Village were briefly discussed.

There was a consensus of the Board to place this item on the Consent Agenda for approval at the next Regular Village Board Meeting.

3.3 Public Works

3.31 Consideration and Discussion of Awarding a Bid to the Lowest Responsible Bidder, Green Acres Landscaping, Inc., for Landscape Corridor and Planting Area Maintenance Services at an Annual Cost of $135,468.00 (Village of Lincolnshire)

Public Works Director Woodbury provided a summary of the request to award a bid to the lowest bidder, Green Acres Landscaping, Inc. for landscape corridor and planting area maintenance services.

Trustee Feldman asked if there were any complaints from staff regarding Green Acres. Public Works Director Woodbury stated staff did not have any complaints regarding Green Acres Landscaping, Inc.

There was a consensus of the Board to place this item on the Consent Agenda for approval at the next Regular Village Board Meeting.

3.32 Consideration and Discussion of Awarding of Bid to Alpha Building Maintenance Service, Inc., Homer Glen, IL, for Village Custodial Services at an Annual Cost of $25,764.00 (Village of Lincolnshire)

Public Works Director Woodbury provided a summary of the request to award a bid to Alpha Building Maintenance service, Inc. for Village custodial services competitively bid every three years.

There was a consensus of the Board to place this item on the Consent Agenda for approval at the next Regular Village Board Meeting.

3.4 Public Safety

3.5 Parks & Recreation

~~**3.51 Consideration and Discussion of Park Board Recommendation to Approve the Lincolnshire Sports Association (LSA) Request to Share LSA Summer Baseball Tournament Revenues with the Village of Lincolnshire (Lincolnshire Sports Association)**~~

Item 3.51 was moved up on the Agenda.

3.6 Judiciary and Personnel

4.0 UNFINISHED BUSINESS

4.1 Watermain Update

Trustee Servi asked if the watermain work on Westwood Lane was complete. Public Works Director Woodbury stated connections were made to Bedford; the schedule is to make connections to Westwood Lane the next day, weather permitting. Pavement repairs should start end of the week/beginning of next week.

4.2 Detention Basin Study

Trustee Feldman asked if there is any work being done on surveying the sewer system and capacity. Public Works Director Woodbury stated staff is working with some engineering firms on the detention basin study and to determine what locations they want to start on first.

4.3 Pulte Homes

Trustee McDonough noted when Pulte presented last it was stated some of the fees had not been paid and some pavement issues had not been worked out. Trustee McDonough asked if staff could provide this information for review before the next meeting. Community & Economic Development Director McNellis stated staff will provide these items to the Board for review.

Return to Agenda

5.0 NEW BUSINESS

5.1 Budget Meetings

Trustee McDonough noted special Budget meetings are coming up and if any of the Trustees have not responded on the proposed dates to please let staff know availability.

6.0 EXECUTIVE SESSION

7.0 ADJOURNMENT

Trustee McDonough moved and Trustee Servi seconded the motion to adjourn. Upon a voice vote, the motion was approved unanimously and Temporary Chair McDonough declared the meeting adjourned at 9:24 p.m.

Respectfully submitted,

VILLAGE OF LINCOLNSHIRE

Barbara Mastandrea
Village Clerk

Return to Agenda

Village of Lincolnshire

Agenda Item 3.11, COW

REQUEST FOR BOARD ACTION
Committee of the Whole
October 13, 2015

Subject:	Proposed 17-lot R2A Single-Family Subdivision – Policy Phase (Mons Property at 1700 Riverwoods Road)
Action Requested:	Consideration of Zoning Board recommendation regarding Rezoning from the R1, Single-Family Residence District to the R2A, Single-Family Residence District, to permit the development of an environmentally sensitive large lot subdivision
Originated By/Contact:	Stephen Robles, Village Planner Department of Community & Economic Development
Referred To:	Zoning Board

Background:

- On May 21, 2015, the Zoning Board recommended by a vote of 4 yes votes and one no vote to rezone the property located at 1700 Riverwoods Road from R1, Single-Family Residence District, to R2A, Single-Family Residence District, as outlined in the R2A Policy Phase approval procedures, to permit development of an environmentally sensitive large lot subdivision.
- The subject parcel is currently improved with an existing vacant single-family residential home.
- The Petitioner seeks rezoning the 14-acre lot to the R2A District for development of a 17-lot, single-family subdivision.

Zoning Process Summary:

- Development proposals seeking the R2A zoning do not follow the traditional rezoning and subdivision process, rather the R2A zoning regulations require a two-phase review process:
    1. Policy Phase: In this first phase, the Zoning Board provides a recommendation on the proposed rezoning to the R2A District, based upon conceptual subdivisions plans. The Village Board then approves or disapproves the zoning change only (does not include subdivision, lot development or permit approval). A full analysis of the proposed subdivision, including platted-lot development, preliminary engineering and landscaping, does not occur until the Technical Phase.
    2. Technical Phase: Following zoning approval of the R2A, the second phase involves Village Board determination of the preliminary subdivision plat upon recommendation from the Zoning Board, then final subdivision plat determination following Zoning Board recommendation, and concludes with lot development permits approved by the Village Engineer and Forester.

The R2A Single-Family Residence District *is designed to permit the development of environmentally sensitive large lot areas through the application of responsible environmental and other planning criteria. The intent is to encourage a creative approach to the use of land, preserve natural vegetation, topographic and geologic features, enhance the appearance of the neighborhoods by the conservation of forested areas, water bodies and the preservation of natural vegetation and wildlife and advance the various Lincolnshire planning policies outlined in the Official Comprehensive Policies Plan*. (Source: Lincolnshire Zoning Code – Chapter 5, Article B)

- The R2A Zoning District permits a density of 0.5 – 1.0 units per acre. However, the Village Board may approve density premiums up to 1.25 units per acre where *"the petitioner shows special attention to protection and preservation of natural environmental resources and where the proposed development significantly advances the policy objectives of the Official Comprehensive Plan of the Village*".

Environmental Features Summary:

- The R2A Zoning District was established to encourage a creative approach to land planning through preserving natural vegetation, conserving forested areas, water bodies and natural vegetation. The developer proposes to preserve and buffer the existing wetland area located in the north-central portion of the site, which aligns and continues the existing conservation outlot in the Whytegate Unit III subdivision to the north, to promote this environmentally-sensitive feature.
- The developer also proposes bio-swales located in rear yards and restricted landscape easements to further enhance the environmental component of the proposed R2A subdivision.

Subdivision Design/Layout Summary:

- The proposed 17-lot single-family subdivision follows a similar development pattern as Whytegate Unit III (immediately north), consisting of a single vehicular entrance from Riverwoods Road, terminating in a cul-de-sac, with a pedestrian path connection to Brampton Lane, as illustrated in the attached subdivision concept plan.
- Per R2A requirements, single-family lots shall be no smaller than 20,000 square feet, and must have an average lot size at least 22,000 square feet, which the conceptual development plans achieves, with an average lot size of 27,258.71 square feet.
- The proposed cul-de-sac measures 1,100' long, in excess of the maximum permitted 800 ft. length (Sec. 7-5-2(G)). Although cul-de-sacs of this length are relatively common along both sides of Riverwoods Road (north of Rt. 22), a variation from the subdivision regulations will be required as part of the preliminary plat review during the technical phase, after consideration of the Rezoning in the current Policy Phase.

Density Summary:

- At the February 24, 2014 preliminary evaluation of the rezoning and subdivision requests, the Village Board requested the Zoning Board explore a reduction in density from the initially proposed 19 lots. Density was subsequently reduced to 17 lots for Zoning Board review. The density reduction is summarized below:

Meeting	Number of Lots	Land Area (acres)	Density (units/acre)
Feb 24th Village Board Preliminary Evaluation	19	14.5	1.3
May 21st Zoning Board	17	14.5	1.17

- Per Village Board request, the attached table provides a comparison of initial subdivision plans presented and COW referral and the final approved density for past single-family residential subdivisions north of Route 22.

- The Update 2012 Comprehensive Plan recommends rezoning of the subject property from the R1 District to a zoning consistent with the R2A District to support *"development consistent with the existing neighborhoods to ensure uniformity, consistency and cohesion*

as an integrated component of the residential community upon completion". The proposed R2A zoning is consistent with adjacent residential developments fronting Riverwoods Road and the proposed environmental enhancements are essential to demonstrating the environmental character of this parcel.

Per Village Board request, Staff mailed courtesy notices of Tuesday night's meeting to all surrounding residents within 250 ft. of the subject parcel.

Recommendation:
Consideration of rezoning to the R2A District, pursuant to the R2A Policy Phase, for a proposed 17-lot single-family residential subdivision and placement on the September 15th Consent Agenda for approval.

Reports and Documents Attached:
- Location Map.
- Draft Ordinance, prepared by Village Attorney Simon, includes Presentation Packet, prepared by Arthur J. Greene Construction Company and Manhard Consulting, Ltd., received October 6, 2015.
- Critical Area 2 Excerpt from Village of Lincolnshire Comprehensive Plan, Update 2012.
- Change in Approved Single-Family Residential Subdivisions North of Route 22 table, prepared by Staff.
- Staff Memorandum and Meeting Minutes of the May 21, 2015 Zoning Board.
- Email Correspondence from Dr. and Mrs. Mark Anderko, received May 13, 2015.

Meeting History	
Referral at Village Board (COW):	February 24, 2014
Zoning Board (Public Hearing):	May 21, 2015
Current Board Discussion (COW):	October 13, 2015

Return to Agenda

Village of Lincolnshire
Community Development Department

LOCATION MAP

1700 Riverwoods Road
Project No: CD2014-001

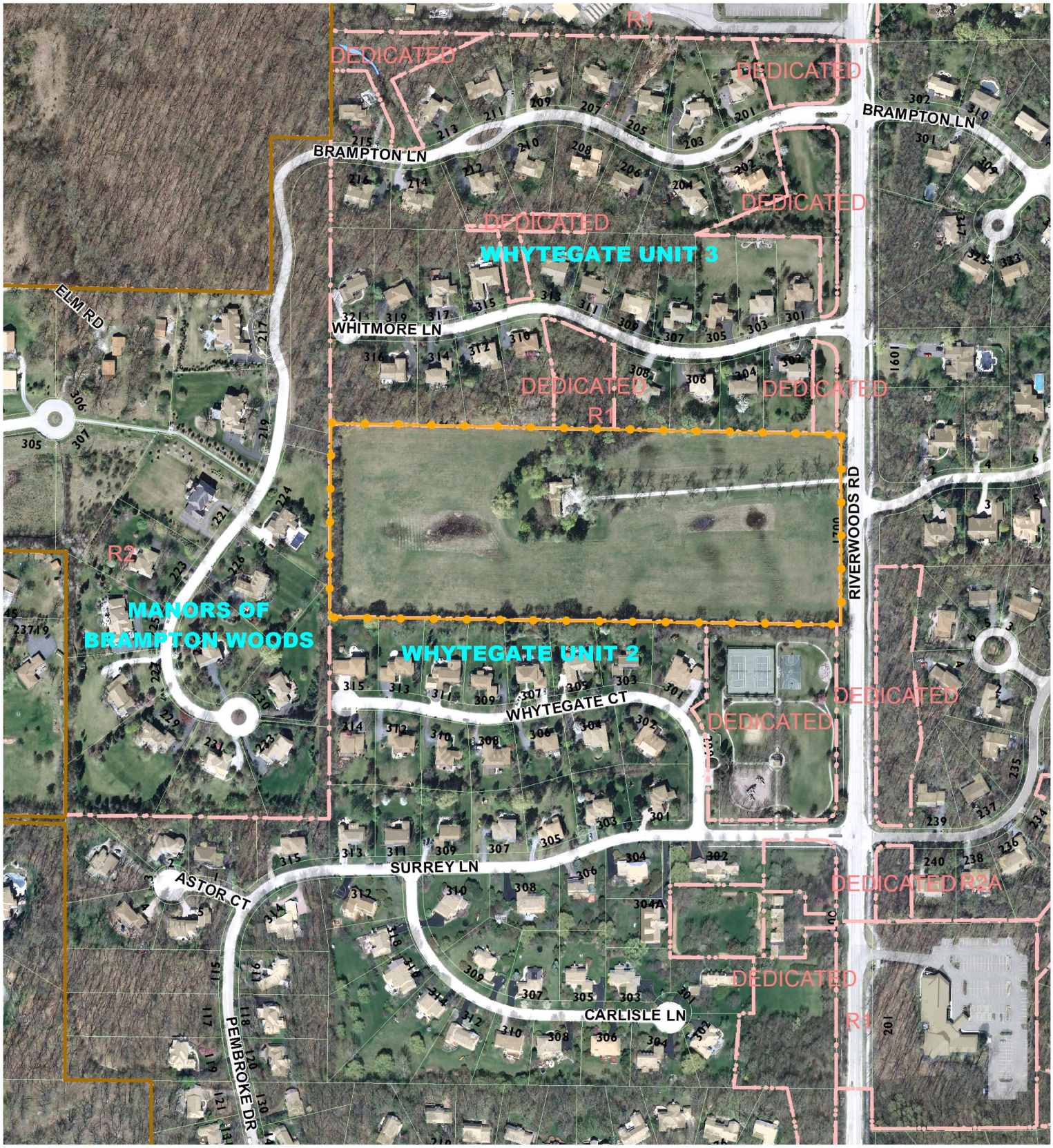

GIS consortium

Village Boundary
Zoning Districts
Building
Subject Location
Parcel

0 150 300 600 Feet

Return to Agenda

VILLAGE OF LINCOLNSHIRE
LAKE COUNTY, ILLINOIS

ORDINANCE NO. _____

AN ORDINANCE REZONING PROPERTY
COMMONLY KNOWN AS 1700 RIVERWOODS ROAD
(MANORS OF WHYTEGATE)

WHEREAS, application has been made by the Arthur J. Greene Construction Company, an Illinois corporation (the "Applicant"), for the rezoning of a property commonly known as 1700 Riverwoods Road (the "Property") from R1- Single-Family Residence District to R2A - Single-Family Residence District; and

WHEREAS, the proposed rezoning is proposed to be concurrent with and conditioned upon the subdivision of the Property for the development of a new residential subdivision to be known as Manors of Whytegate;

WHEREAS, the Zoning Board of the Village of Lincolnshire, Lake County, Illinois, pursuant to publication and personal notice as required by law, held a Public Hearing commencing on May 21, 2015, on the question of the rezoning and whether the Applicant's plan meets the standards for an environmentally sensitive large lot subdivision specifically described for the R2A Single Family Residence District, and

WHEREAS, the Zoning Board has adopted findings of fact required to demonstrate the application for rezoning meets the criteria described in Section 6-14-10-D of the Village Code.

NOW, THEREFORE, BE IT ORDAINED by the Mayor and Board of Trustees of the Village of Lincolnshire, Lake County, Illinois, in the exercise of its home rule powers, as follows:

Section 1: That the written findings, dated May 21, 2015, attached hereto as Exhibit A and made a part hereof, are incorporated herein by reference as the findings of this Board with the same effect as if fully recited herein at length.

Section 2: That the Lincolnshire Zoning Code, is amended by rezoning the following described properties from R1-Single Family Residence District to R2A Single-Family Residence District:

SEE ATTACHED LEGAL DESCRIPTION AT EXHIBIT B

Section 3: That the Zoning Map of the Village of Lincolnshire, Lake County, Illinois, is hereby amended so as to be in conformance with the aforesaid zoning.

Section 4: That this ordinance granting a map amendment, including the relief specifically and collectively described in Sections 2 and 3, is subject to and contingent upon the Applicant meeting the following conditions:

A. The Applicant shall develop the Property in a manner which shall conform in substance with the approved zoning site plan, including measures designed to protect the Property's environmentally-sensitive features, as more fully depicted in the plan attached hereto as Exhibit C;

B. The approval described herein is contingent on the Applicant completing the "Technical Phase" of R2A development, as more completely described in Section 6-5B-6-2 of the Village Code;

C. The Village approving a Plat of Subdivision which complies with Title 6 and Title 7 of the Village Code, with a variance for the length of the cul-de-sac; and

Failure of the Applicant to meet all of the foregoing conditions within three (3) years from the date of this Ordinance shall result in the zoning amendment described herein to become null and void and the zoning of the Property shall revert to the R1 Single-Family Residence Zoning District.

Section 5: The specific terms and conditions of this Ordinance shall prevail against other existing ordinances of the Village to the extent that there might be any conflict. The subject properties are subject to all terms and conditions of applicable ordinances and regulations of the

Village of Lincolnshire including, without limitation, zoning ordinances, building codes, subdivision, sign control, tree preservation and landscape regulations.

Section 6: Any person violating the terms and conditions of this Ordinance shall be subject to a penalty not exceeding Five Hundred Dollars ($500.00) with each and every day that the violation of the Ordinance is allowed to remain in effect being deemed a complete and separate offense. In addition, the appropriate authorities of the Village may take such other action as they deem proper to enforce the terms and conditions of this Ordinance, including, without limitation, an action in equity to compel compliance with its terms. That any person violating the terms of this Ordinance shall be subject, in addition to the foregoing penalties, to the payment of court costs and reasonable attorneys' fees.

Section 7: This Ordinance shall be in full force and effect from and after its passage, approval and publication in pamphlet form as provided by law. Provided, however, that this Ordinance shall not take effect until a true and correct copy of this Ordinance is executed by the Applicant and such other parties in interest consenting to and agreeing to be bound by the terms and conditions contained within this Ordinance. Such execution shall take place within sixty (60) days after the passage and approval of this Ordinance or within such extension of time as may be granted by the Corporate Authorities by motion.

PASSED this ____ day of _____, 2015, by the Corporate Authorities of the Village of Lincolnshire, on a roll call vote as follows:

AYES:

NAYS:

ABSENT:

APPROVED this ____ day of _____, 2015.

Return to Agenda

_____
Elizabeth J. Brandt, Mayor

ATTEST:

_____
Barbara Mastandrea, Village Clerk

4818-9038-3396, v. 1

Return to Agenda

ACCEPTED AND AGREED:

ARTHUR J. GREENE CONSTRUCTION COMPANY,
an Illinois corporation

_____
By:

Title: _____

Date: _____

Return to Agenda

EXHIBIT A

FINDINGS OF FACT

1. *Existing zoning classification of the property.*

The existing zoning of the property is R1Single Family Residence District

2. *Existing uses of property and existing physical, social or economic factors within the general area of the property in question.*

The existing land use of the surrounding area is entirely single family residential. On the north is the Whytegate Unit 3 subdivision; on the south is Whytegate Unit 2 subdivision; on the west is the Manors of Brampton Woods; on the east is Riverwoods Road and the Briarwoods of Lincolnshire Subdivision.

3. *The zoning classification of property within the general area of the property in question.*

The existing zoning surrounding the property and beyond is entirely single family residential. The existing zoning within the immediate area includes: north – R2A Single-Family Residence District; south – R2A Single-Family Residence District; west - R2 Single Family Residence District; and east – R2A Single-Family Residence District.

4. *The suitability of the property in question to the uses permitted under the existing or proposed zoning classification.*

The site is suitable for development under the current zoning, but the resulting lots of that size would not be compatible with the surrounding area. Under the proposed zoning of R2A, lots can be developed at an average of 22,000 square feet which is compatible to surrounding developments. Both water and sanitary sewer is available to the site.

5. *The trend of development, if any, in the general area of the property in question, including changes, if any, which have taken place in its present zoning classification.*

The subject property is the last vacant parcel of land in this area of the Village of Lincolnshire that has not been developed as single family housing. All of the land in the immediate area has been rezoned to similar zoning districts….primarily R2A Single Family Residence District and has been approved in the subdivision process.

Return to Agenda

EXHIBIT A

In fact all zoning south (including Brampton Lane along Riverwoods Road corridor) to Half Day Road, is zoned R-2A.

6. *The length of time the property has been vacant as zoned.*

The property has an existing home which is 70+ years old and up to 4 years ago was home to the owner. The owner is now deceased and the family has gone under contract with the petitioner to sell the property. The property was forcibly annexed by the Village in 1998 and zoned R-1.

7. *The extent to which the property's value is diminished by the existing zoning classification.*

Based on the existing zoning, the development of the property would not be compatible with the surrounding higher -density land use and zoning, thus diminishing the property's value.

8. *The impact upon the objectives of the official Comprehensive Plan of the Village, as amended.*

The Village of Lincolnshire Comprehensive Plan has indicated the subject property to be Critical Area 2 of the East Sector. The Comprehensive Plan calls for an "Environmentally Sensitive Residential" land use classification. The plan as proposed keeps the wetland/ grove of trees intact, keeps the surrounding hedgerow intact, and the proposed zoning and subdivision maintains the density of the surrounding area.

Prepared by:

Glenn M. Christensen
Senior Planner
Manhard Consulting
900 Woodlands Parkway
Vernon Hills, Illinois 60061

Petitioner:

Arthur J. Greene Construction Company
175 East Hawthorn Parkway
Suite 200
Vernon Hills, Illinois 60061

Return to Agenda

EXHIBIT B

LEGAL DESCRIPTION OF SUBJECT PROPERTY

THE SOUTH 15 ACRES OF THE NORTH 45 ACRES OF THE EAST HALF OF THE NORTHEAST QUARTER OF SECTION 14, TOWNSHIP 43 NORTH, RANGE 11 EAST OF THE THIRD PRINCIPAL MERIDIAN, IN LAKE COUNTY, ILLINOIS (EXCEPT THAT PART THEREOF PREVIOUSLY ANNEXED LYING WITHIN RIVERWOODS ROAD).

Return to Agenda

EXHIBIT C

DEVELOPMENT PLANS TO PROTECT ENVIRONMENTALLY-SENSITIVE FEATURES

[ATTACHED]

Return to Agenda

NOTE: THIS DRAWING IS FOR ILLUSTRATION PURPOSES ONLY AND SUBJECT TO CHANGE

Return to Agenda

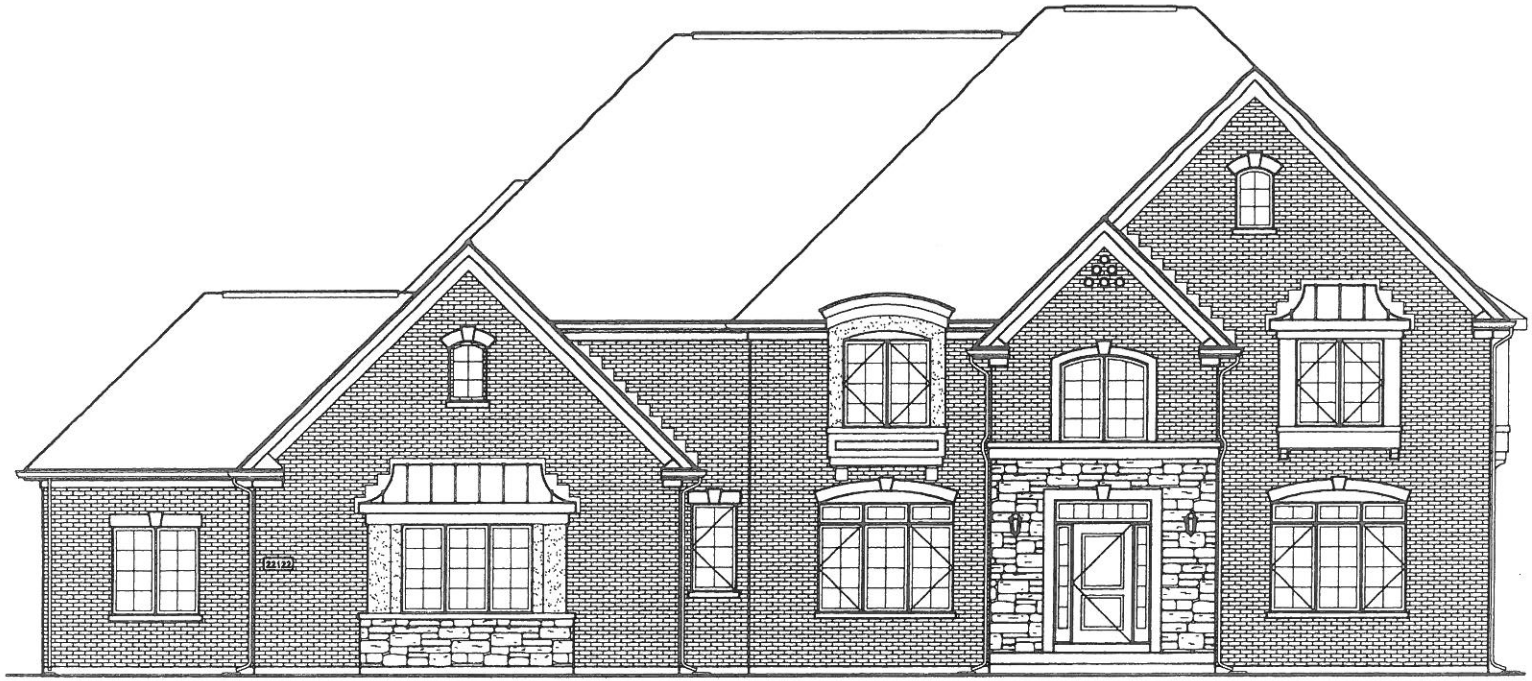

NOTE: THIS DRAWING IS FOR ILLUSTRATION PURPOSES ONLY AND SUBJECT TO CHANGE

Return to Agenda

NOTE: THIS DRAWING IS FOR ILLUSTRATION PURPOSES ONLY AND SUBJECT TO CHANGE

Return to Agenda

NOTE: THIS DRAWING IS FOR ILLUSTRATION PURPOSES ONLY AND SUBJECT TO CHANGE

Return to Agenda

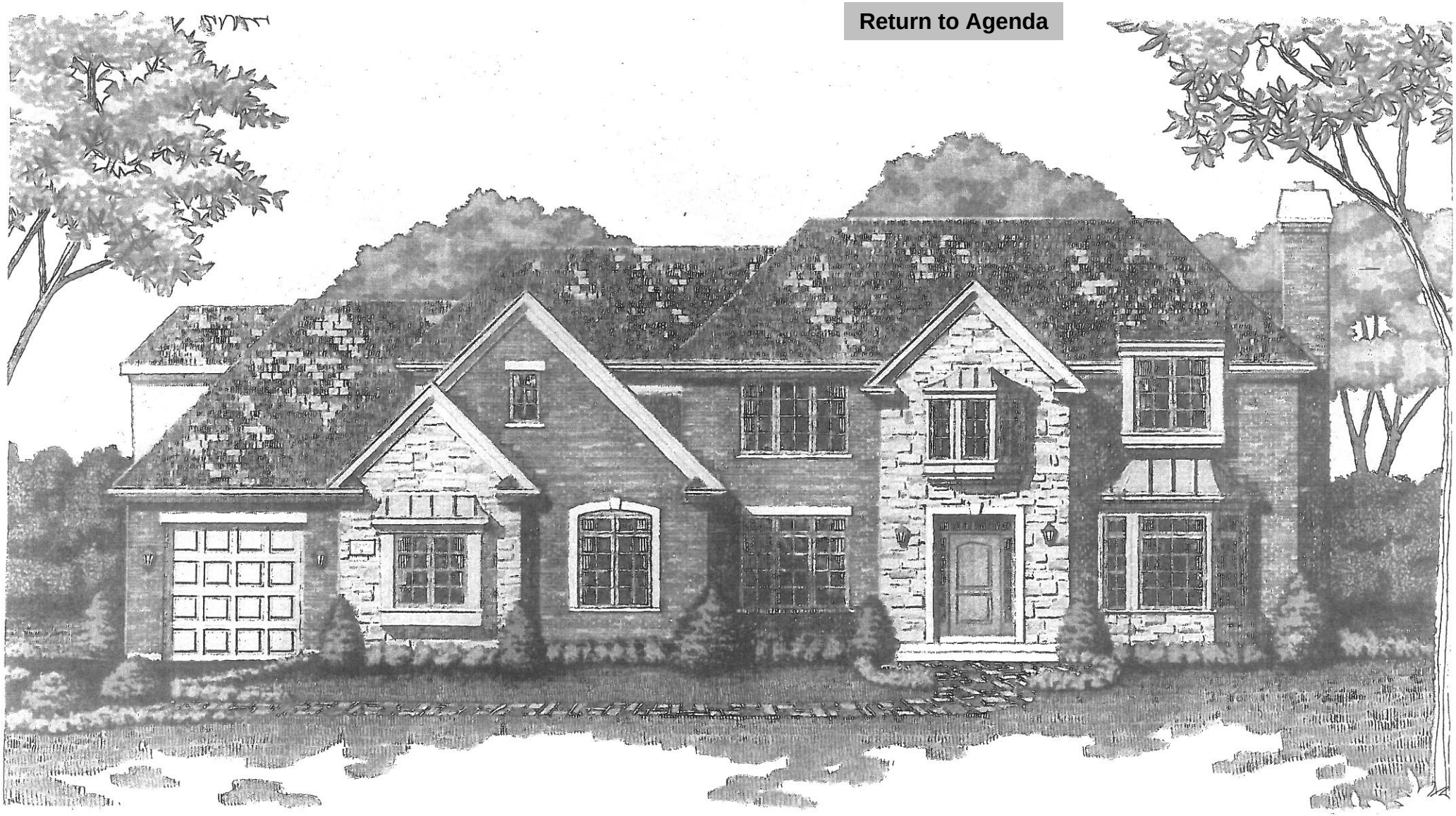

NOTE: THIS DRAWING IS FOR ILLUSTRATION PURPOSES ONLY AND SUBJECT TO CHANGE

Return to Agenda

PRELIMINARY PLAT OF MANORS OF WHYTEGATE

BEING A SUBDIVISION OF PART OF THE EAST HALF OF THE NORTHEAST QUARTER OF SECTION 14, TOWNSHIP 43 NORTH, RANGE 11 EAST OF THE THIRD PRINCIPLE MERIDIAN, ALL IN LAKE COUNTY, ILLINOIS.

EXISTING P.I.N. 15-14-200-028

PROPERTY AREA

TOTAL AREA = 633,668 SQUARE FEET
(14.547 ACRES) MORE OR LESS

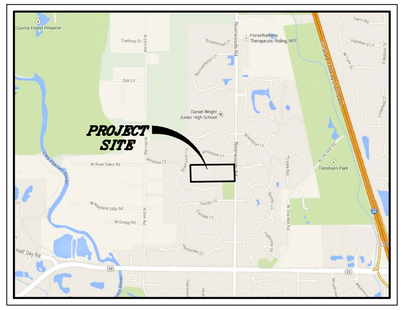

LOCATION SKETCH
NOT TO SCALE

GRAPHIC SCALE
(IN FEET)
1 inch = 50 ft.

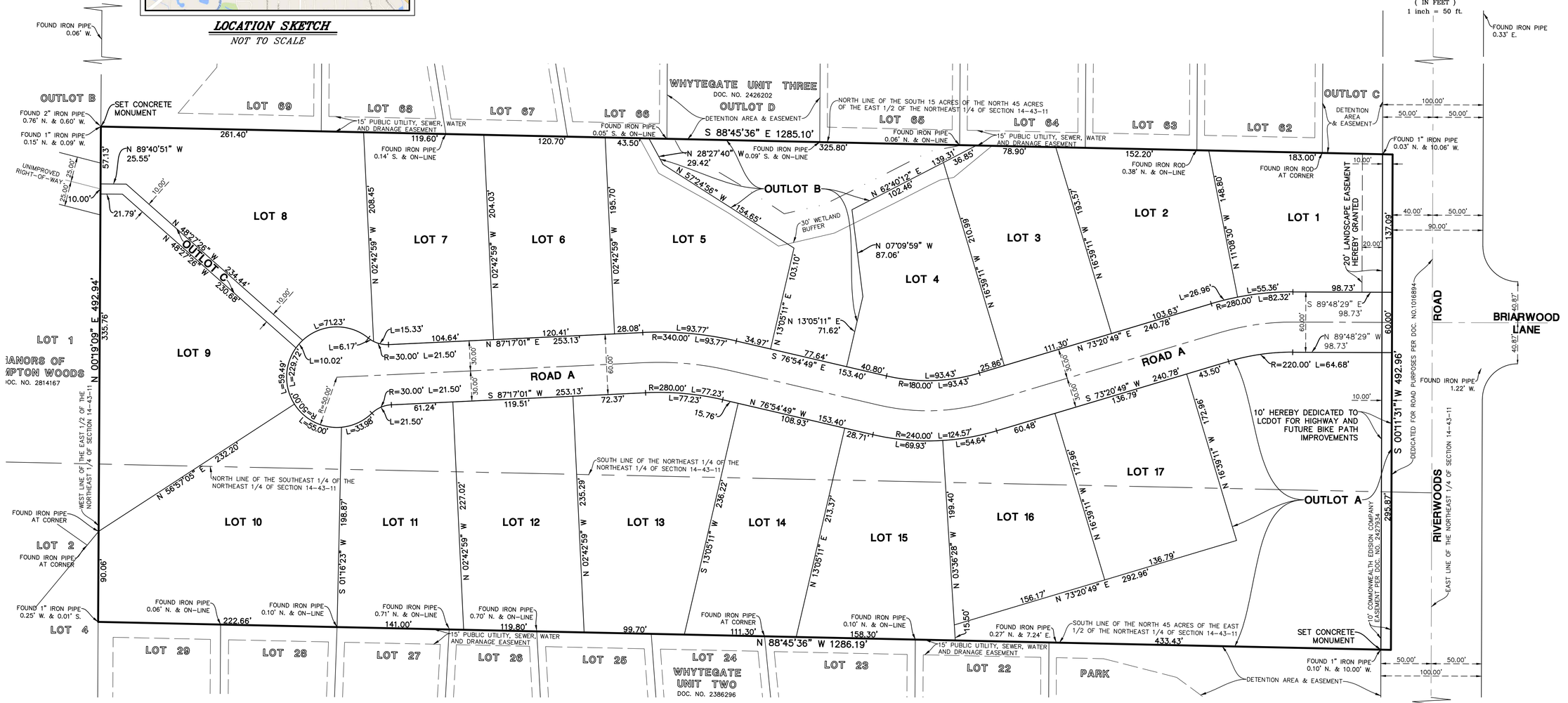

BASIS OF BEARINGS

BEARINGS ARE BASED UPON THE ILLINOIS COORDINATE SYSTEM, EAST ZONE, NORTH AMERICAN DATUM OF 1983 (2011 ADJUSTMENT) CORRECTED TO GROUND VALUES, AS ESTABLISHED BY REAL TIME KINEMATIC (RTK) GLOBAL NAVIGATION SATELLITE SYSTEM (GNSSS) METHODS.

SURVEYOR'S NOTES

1. THERE SHALL BE NO DIRECT ACCESS TO OR FROM RIVERWOODS ROAD TO OR FROM LOT 1 AND OUTLOT A.
2. OUTLOT A, OUTLOT B AND OUTLOT C SHALL BE CONVEYED TO THE VILLAGE OF LINCOLNSHIRE.
3. SET CONCRETE MONUMENTS WILL BE SET AFTER APPROVAL OF FINAL PLAT BUT BEFORE RECORDING OF THE FINAL PLAT.

THIS PLAT SUBMITTED FOR RECORDING BY:
VILLAGE OF LINCOLNSHIRE
ONE OLDE HALF DAY ROAD
LINCOLNSHIRE, ILLINOIS 60069
RETURN MYLARS TO THE VILLAGE OF LINCOLNSHIRE

SUBDIVIDER & DEVELOPERS NAME & ADDRESS
ARTHUR J. GREENE CONSTRUCTION COMPANY
175 EAST HAWTHORN PARKWAY, SUITE 200
VERNON HILLS, ILLINOIS 60061

SHEET INDEX

SHEET 1 OF 4:	OVERALL BOUNDARY INFORMATION, AND LOT OVERVIEW
SHEET 2 OF 4:	LOT AND EASEMENT DETAILS (WEST)
SHEET 3 OF 4:	LOT AND EASEMENT DETAILS (EAST)
SHEET 4 OF 4:	CERTIFICATES, EASEMENT PROVISIONS, LEGAL DESCRIPTION AND SURVEYOR'S CERTIFICATE

DATE	REVISIONS	DRAWN BY

Manhard CONSULTING LTD
900 Woodlands Parkway, Vernon Hills, IL 60061 ph 847.634.5550 fx 847.634.0095 manhard.com
Civil Engineers • Surveyors • Water Resource Engineers • Water Engineers
Construction Managers • Environmental Scientists • Landscape Architects • Planners

MANORS OF WHYTEGATE
VILLAGE OF LINCOLNSHIRE, ILLINOIS
PRELIMINARY PLAT OF SUBDIVISION

PROJ. MGR.:	JDB
PROJ. ASSOC.:	LSM
DRAWN BY:	LSM
DATE:	11/07/13
SCALE:	1"=50'

SHEET 1 OF 4
AGCLN3

© 2012 MANHARD CONSULTING, LTD. ALL RIGHTS RESERVED

October 6, 2015 - 14:52 Dwg Name: P:\Agcln3\dwg\Surv\Final Drawings\Plat of Subdivision\Preliminary Plat\02-AGCLN3-PR.dwg Updated By: lmorr

Return to Agenda

PRELIMINARY PLAT OF MANORS OF WHYTEGATE

BEING A SUBDIVISION OF PART OF THE EAST HALF OF THE NORTHEAST QUARTER OF SECTION 14, TOWNSHIP 43 NORTH, RANGE 11 EAST OF THE THIRD PRINCIPLE MERIDIAN, ALL IN LAKE COUNTY, ILLINOIS.

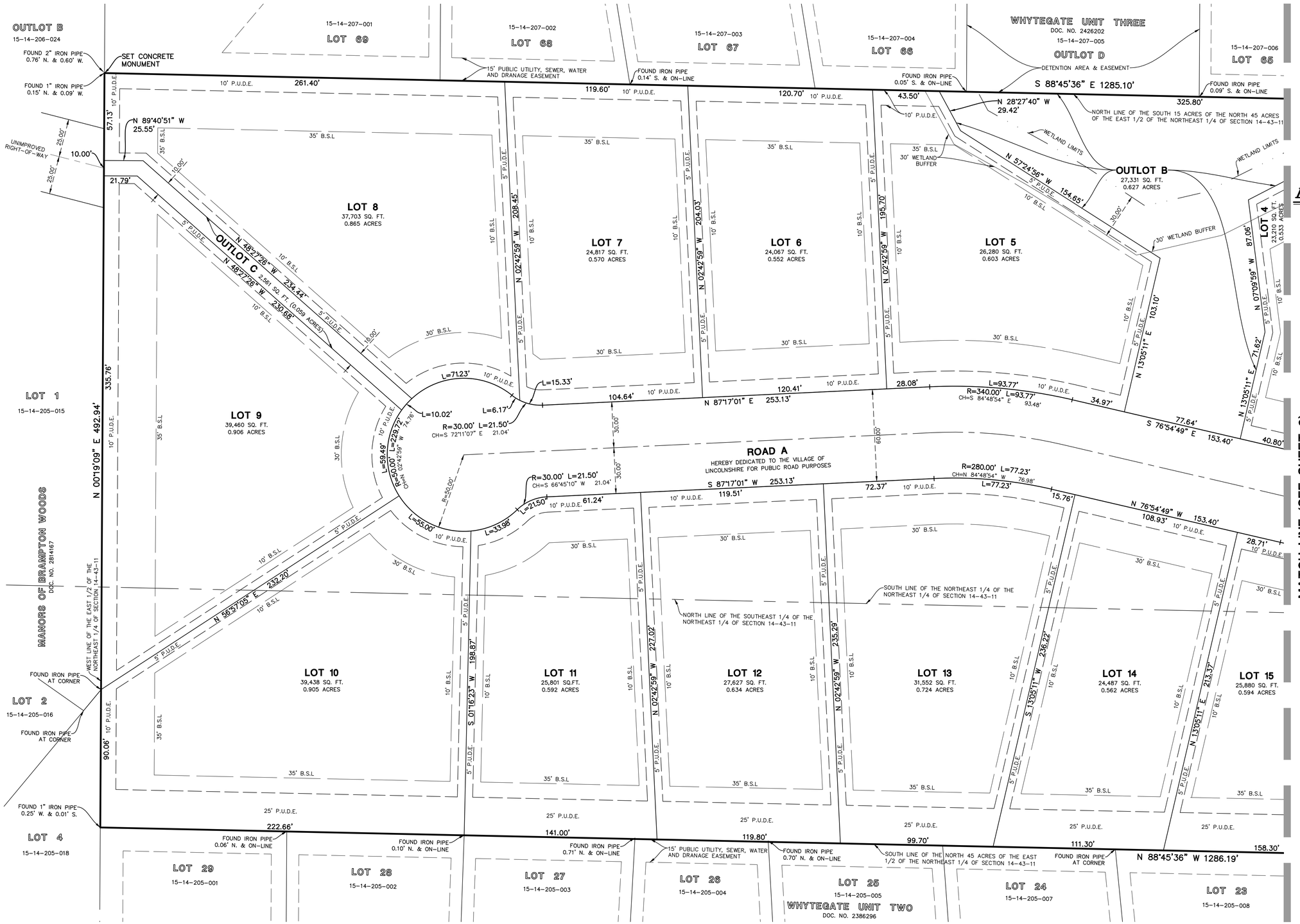

LEGEND

P.U.D.E = PUBLIC UTILITY AND DRAINAGE EASEMENT HEREBY GRANTED

B.S.L = BUILDING SETBACK LINE

NOTE:
1. THERE SHALL BE NO DIRECT ACCESS TO OR FROM RIVERWOODS ROAD TO OR FROM LOT 1.
2. OUTLOT A, OUTLOT B AND OUTLOT C SHALL BE CONVEYED TO THE VILLAGE OF LINCOLNSHIRE.

BASIS OF BEARINGS

BEARINGS ARE BASED UPON THE ILLINOIS COORDINATE SYSTEM, EAST ZONE, NORTH AMERICAN DATUM OF 1983 (2011 ADJUSTMENT) CORRECTED TO GROUND VALUES, AS ESTABLISHED BY REAL TIME KINEMATIC (RTK) GLOBAL NAVIGATION SATELLITE SYSTEM (GNSSS) METHODS.

DATE	REVISIONS	DRAWN BY

Manhard CONSULTING LTD
900 Woodlands Parkway, Vernon Hills, IL 60061 ph.847.634.5550 fx.847.634.0095 mail@manhard.com
Civil Engineers • Surveyors • Water Resource Engineers • Water & Wastewater Engineers • Transportation Engineers
Construction Managers • Environmental Scientists • Landscape Architects • Planners

MANORS OF WHYTEGATE
VILLAGE OF LINCOLNSHIRE, ILLINOIS
PRELIMINARY PLAT OF SUBDIVISION

PROJ. MGR.:	JDB
PROJ. ASSOC.:	LSM
DRAWN BY:	LSM
DATE:	11/07/13
SCALE:	1"=30'

SHEET 2 OF 4
AGCLN3

© 2012 MANHARD CONSUL TING, LTD. ALL RIGHTS RESERVED

October 6, 2015 – 13:07 Dwg Name: P:\Agcln3\dwg\Cors\Final Drawings\Plat of Subdivision\Preliminary Plat\02-03-AGCLN3-PP.dwg Updated By: mcrx

Return to Agenda

PRELIMINARY PLAT OF MANORS OF WHYTEGATE

BEING A SUBDIVISION OF PART OF THE EAST HALF OF THE NORTHEAST QUARTER OF SECTION 14, TOWNSHIP 43 NORTH, RANGE 11 EAST OF THE THIRD PRINCIPLE MERIDIAN, ALL IN LAKE COUNTY, ILLINOIS.

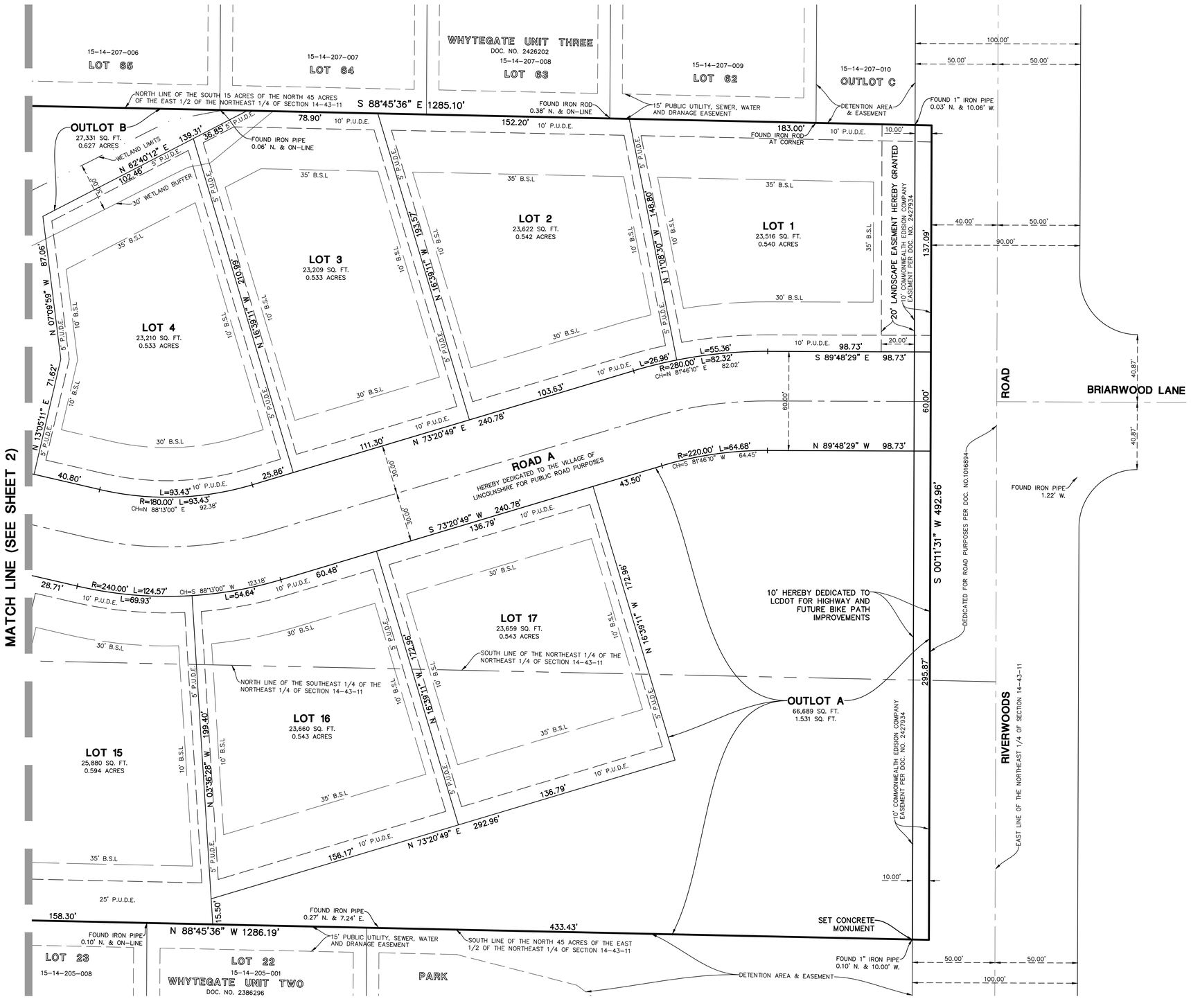

LEGEND

P.U.D.E = PUBLIC UTILITY AND DRAINAGE EASEMENT HEREBY GRANTED

B.S.L = BUILDING SETBACK LINE

NOTE:
1. THERE SHALL BE NO DIRECT ACCESS TO OR FROM RIVERWOODS ROAD TO OR FROM LOT 1.

2. OUTLOT A, OUTLOT B AND OUTLOT C SHALL BE CONVEYED TO THE VILLAGE OF LINCOLNSHIRE.

BASIS OF BEARINGS

BEARINGS ARE BASED UPON THE ILLINOIS COORDINATE SYSTEM, EAST ZONE, NORTH AMERICAN DATUM OF 1983 (2011 ADJUSTMENT) CORRECTED TO GROUND VALUES, AS ESTABLISHED BY REAL TIME KINEMATIC (RTK) GLOBAL NAVIGATION SATELLITE SYSTEM (GNSSS) METHODS.

DATE	REVISIONS	DRAWN BY

Manhard CONSULTING LTD
900 Woodlands Parkway, Vernon Hills, IL 60061 ph.847.634.5550 fx.847.634.0095 manhard.com
Civil Engineers • Water Resource Engineers • Surveyors • Water & Wastewater Engineers
Construction Managers • Environmental Scientists • Landscape Architects • Planners

MANORS OF WHYTEGATE
VILLAGE OF LINCOLNSHIRE, ILLINOIS
PRELIMINARY PLAT OF SUBDIVISION

PROJ. MGR.:	JDB
PROJ. ASSOC.:	LSM
DRAWN BY:	LSM
DATE:	11/07/13
SCALE:	1"=30'

SHEET 3 OF 4

AGCLN3

© 2012 MANHARD CONSULTING, LTD. ALL RIGHTS RESERVED

October 6, 2015 – 14:55 Dwg Name: P:\Agcln3\dwg\Grx\Final Drawings\Plat of Subdivision\Preliminary Plat\02-03-AGCLN3-PR.dwg Updated By: lmcr

Return to Agenda

PRELIMINARY PLAT
OF
MANORS OF WHYTEGATE

BEING A SUBDIVISION OF PART OF THE EAST HALF OF THE NORTHEAST QUARTER OF SECTION 14, TOWNSHIP 43 NORTH, RANGE 11 EAST OF THE THIRD PRINCIPLE MERIDIAN, ALL IN LAKE COUNTY, ILLINOIS.

OWNER'S CERTIFICATE

STATE OF ________)
) SS
COUNTY OF _______)

THE UNDERSIGNED, ____________________________ HEREBY CERTIFIES THAT THEY ARE THE HOLDER OF THE LEGAL TITLE OF PART OF THE PROPERTY DESCRIBED HEREON AND THAT IT HAS CAUSED SAID PROPERTY TO BE SURVEYED AND SUBDIVIDED AS SHOWN ON THE PLAT HEREON DRAWN.

THIS IS TO ALSO CERTIFY THAT AS OWNER OF PART OF THE PROPERTY DESCRIBED AS BRAMPTON WOODS UNIT 2 AND LEGALLY DESCRIBED ON THE PLAT OF THE SAME NAME, HAVE DETERMINED TO THE BEST OF OUR KNOWLEDGE THE SCHOOL DISTRICTS IN WHICH EACH OF THE FOLLOWING LOTS LIE.

SCHOOL DISTRICT	LOT NUMBER(S)
ELEMENTARY SCHOOL DISTRICT NO. 103	
HIGH SCHOOL DISTRICT NO. 125	LOTS 1, 2, 3, 4, 5, 6, 7, 8, 9, 10, 11, 12, 13, 14,
JUNIOR COLLEGE DISTRICT NO. 532	15, 16, 17, OUTLOT A, OUTLOT B AND OUTLOT C.

DATED THIS _____ DAY OF ______________________ A.D., 20__.

BY: ______________________________

____
PRINTED NAME & TITLE

____

____

____

NOTARY PUBLIC

STATE OF _______)
)SS
COUNTY OF ______)

I, ____________________, A NOTARY PUBLIC, IN AND FOR SAID COUNTY, AND STATE AFORESAID, DO

HEREBY CERTIFY THAT ____________________ OF ______________________, PERSONALLY KNOWN TO ME TO BE THE SAME PERSON(S) WHOSE NAME(S) SUBSCRIBED TO THE FOREGOING INSTRUMENT AS SUCH OWNER(S), APPEARED BEFORE ME THIS DAY IN PERSON AND ACKNOWLEDGED THAT THEY SIGNED AND DELIVERED THE ANNEXED PLAT AS THEIR OWN FREE AND VOLUNTARY ACT FOR THE USES AND PURPOSES THEREIN SET FORTH.

GIVEN UNDER MY HAND AND NOTORIAL SEAL THIS _______ DAY OF _______________ , A.D. 20__,

____
NOTARY PUBLIC

VILLAGE COLLECTOR'S CERTIFICATE

STATE OF ILLINOIS)
) SS
COUNTY OF LAKE)

I, _________________________, COLLECTOR FOR THE VILLAGE OF LINCOLSHIRE, DO HEREBY CERTIFY THAT THERE ARE NO DELINQUENT OR UNPAID CURRENT OR FORFEITED SPAECIAL ASSESSMENTS OR ANY DEFERRED INSTALLMENTS THEREOF THAT HAVE NOT BEEN APPORTIONED AGAINST THE TRACT OF LAND INCLUDED IN THE ANNEXED PLAT.

DATED THIS ______ DAY OF ______________, A.D. 20__.

____
VILLAGE COLLECTOR

____
PRINTED NAME

VILLAGE ENGINEER CERTIFICATE

STATE OF ILLINOIS)
)SS
COUNTY OF LAKE)

APPROVED THIS _____ DAY OF _______________, A.D. 20__. BY THE VILLAGE ENGINEER OF THE VILLAGE OF LINCOLSHIRE, LAKE COUNTY, ILLINOIS.

____
VILLAGE ENGINEER

____
PRINTED NAME

COUNTY HIGHWAY CERTIFICATE

STATE OF ILLINOIS)
) SS
COUNTY OF LAKE)

THIS PLAT IS HEREBY APPROVED THIS ________ DAY OF_______________, A.D., 2015. BY THE COUNTY ENGINEER OF LAKE COUNTY PURSUANT TO CHAPTER 765, ACT 205, SECTION 2 ET. SEQ. OF THE ILLINOIS COMPILED STATUTES, AS AMENDED, AS TO ROADWAY ACCESS TO COUNTY HIGHWAY 58 ALSO KNOWN AS RIVERWOODS ROAD.

DIRECT ACCESS EITHER TO OR FROM COUNTY HIGHWAY 58 SHALL BE RESTRICTED AS SHOWN ON THIS PLAT AND SHALL BE SUBJECT TO THE LAKE COUNTY HIGHWAY ACCESS REGULATION ORDINANCE WHICH REQUIRES, IN PART, THAT APPLICATION BE MADE AND AN ACCESS PERMIT BE OBTAINED FROM THE COUNTY ENGINEER OF LAKE COUNTY PRIOR TO ANY ACCESS INSTALLATION.

____
COUNTY ENGINEER OF LAKE COUNTY

TRUSTEE OWNERS CERTIFICATE

STATE OF __________)
)S.S.
COUNTY OF _________)

THIS IS TO CERTIFY THAT ______________________________, AS

TRUSTEE UNDER TRUST AGREEMENT DATED ______________________ AND

KNOWN AS TRUST NUMBER ______________ AND NOT INDIVIDUALLY, BUT AS TRUSTEE IS OWNER OF THE PROPERTY DESCRIBED HEREON AND THAT IT HAS CAUSED THE SAID PROPERTY TO BE SURVEYED AND SUBDIVIDED AS SHOWN HEREON FOR THE USES AND PURPOSES THEREIN SET FORTH, AND DOES HEREBY ACKNOWLEDGE AND ADOPT THE SAME UNDER THE TITLE THEREON INDICATED. THIS IS TO ALSO CERTIFY THAT ______________, AS OWNER OF THE PROPERTY DESCRIBED AS AND LEGALLY DESCRIBED ON THE PLAT OF THE SAME NAME, HAVE DETERMINED TO THE BEST OF OUR KNOWLEDGE THE SCHOOL DISTRICT IN WHICH EACH OF THE FOLLOWING LOTS LIE.

SCHOOL DISTRICT	LOT NUMBER(S)
ELEMENTARY SCHOOL DISTRICT NO. 103	
HIGH SCHOOL DISTRICT NO. 125	LOTS 1, 2, 3, 4, 5, 6, 7, 8, 9, 10, 11, 12, 13, 14,
JUNIOR COLLEGE DISTRICT NO. 532	15, 16, 17, OUTLOT A, OUTLOT B AND OUTLOT C.

DATED THIS _____ DAY OF _________________, A.D., 20___.

BY: ______________________________

____
PRINTED NAME AND TITLE

ATTEST: ______________________________

____
PRINTED NAME AND TITLE

____

____

____

TRUSTEE NOTARY PUBLIC

STATE OF _________)
)SS
COUNTY OF ________)

I, ____________________, A NOTARY PUBLIC IN AND FOR THE COUNTY AND STATE

AFORESAID, DO HEREBY CERTIFY THAT ______________________________,

TITLE ____________________ AND ______________________________,

TITLE____________________
OF______________________________
WHO IS/ARE PERSONALLY KNOWN TO ME TO BE THE SAME WHOSE NAME(S) IS/ARE SUBSCRIBED TO THE FOREGOING CERTIFICATE, APPEARED BEFORE ME THIS DAY IN PERSON AND ACKNOWLEDGED THAT HE/SHE/THEY DID SIGN AND DELIVER THIS INSTRUMENT AS A FREE AND VOLUNTARY ACT FOR THE USES AND PURPOSES HEREIN SET FORTH.

GIVEN UNDER MY HAND AND NOTORIAL SEAL THIS _____ DAY OF ____________, A.D., 20__.

____
NOTARY PUBLIC

STORMWATER/DRAINAGE RESTRICTIVE COVENANT BY PLAT

STATE OF ILLINOIS)
) SS
COUNTY OF LAKE)

THE UNDERSIGNED, AS FEE OWNERS OF THE REAL PROPERTY DESCRIBED HEREIN, LOCATED IN THE VILLAGE OF LINCOLNSHIRE, COUNTY OF LAKE, STATE OF ILLINOIS, SUCH PROPERTY BEING THE REAL PROPERTY NOW DULY PLATTED AS MANORS OF BRAMPTON WOODS UNIT 3, AS SUCH PLAT IS NOW RECORDED, IN THE OFFICE OF THE RECORDER OF DEEDS OF THE COUNTY OF LAKE, STATE OF ILLINOIS, MAKES THE FOLLOWING DECLARATIONS AS TO LIMITATIONS, RESTRICTIONS AND USES TO WHICH THOSE AREAS DESIGNATED AS STORMWATER & DRAINAGE WAYS OR FLOODPLAIN WETLAND & BUFFER AREAS IN SAID PARCEL/SUBDIVISION MAY BE PUT, AND SPECIFIES THAT SUCH DECLARATIONS SHALL CONSTITUTE COVENANTS TO RUN WITH ALL THE LAND, AS PROVIDED BY LAW, AND SHALL BE BINDING ON ALL PARTIES AND THEIR SUCCESSORS, AND ALL PERSONS CLAIMING UNDER THEM, AND FOR THE BENEFIT OF AND LIMITATIONS ON ALL FUTURE OWNERS IN SUCH PARCEL/SUBDIVISION AND THE SURROUNDING AND DOWNSTREAM AND UPSTREAM AREAS, THIS DECLARATION BEING IN COMPLIANCE WITH APPLICABLE STORMWATER AND DRAINAGE RULES, REGULATIONS, AND ORDINANCES, AND SUITABLE FOR SUCH STORMWATER RETENTION AND DRAINAGE PATHWAYS AND FACILITIES, AS SPECIFIED HEREIN:

1. USE RESTRICTION. A RESTRICTIVE COVENANT RUNNING WITH THE LAND FOR THE INSTALLATION AND MAINTENANCE OF STORMWATER AND DRAINAGE FLOODPLAIN WETLANDS & BUFFER AREAS ARE RESERVED AS SHOWN ON THE RECORDED PLAT. WITHIN THESE RESTRICTED AREAS, NO STRUCTURE, PLANTING, OR OTHER MATERIAL SHALL BE PLACED OR PERMITTED TO REMAIN WHICH MAY DAMAGE OR INTERFERE WITH THE INSTALLATION OR PERFORMANCE OF STORMWATER AND DRAINAGE FLOODPLAIN WETLAND & BUFFER AREAS, OR WHICH MAY CHANGE THE DIRECTION OF FLOW OF STORMWATER OR DRAINAGE CHANNELS IN THE RESTRICTED AREAS, OR WHICH MAY OBSTRUCT OR RETARD THE FLOW OF WATER THROUGH STORMWATER AND DRAINAGE CHANNELS IN THE RESTRICTED AREA. THE RESTRICTED AREA OF EACH LOT SHALL BE MAINTAINED CONTINUOUSLY BY THE OWNER OF THE LOT, EXCEPT FOR THOSE IMPROVEMENTS FOR WHICH A PUBLIC AUTHORITY OR HOMEOWNERS ASSOCIATION HAS FORMALLY ACCEPTED RESPONSIBILITY.

2. TERM. THIS COVENANT IS TO RUN WITH THE LAND AND SHALL BE BINDING ON ALL PARTIES AND THEIR SUCCESSORS AND ALL PERSONS CLAIMING UNDER THEM, AND ALL PUBLIC AGENCIES, FOR A PERPETUAL PERIOD FROM THE DATE THESE COVENANTS ARE RECORDED.

3. ENFORCEMENT. ENFORCEMENT SHALL BE BY PROCEEDINGS BY LAW OR IN EQUITY AGAINST ANY PERSON VIOLATING OR THREATENING TO VIOLATE ANY COVENANT EITHER TO RESTRAIN VIOLATION OR TO RECOVER DAMAGES. ENFORCEMENT MAY BE UNDERTAKEN BY ANY GRANTOR OR GRANTEE IN THE CHAIN OF TITLE, ANY PROPERTY OWNER IN THE SUBDIVISION, ANY PROPERTY OWNER LYING DOWNSTREAM OR UPSTREAM ADVERSELY EFFECTED BY ANY VIOLATION OR THREAT TO VIOLATE THIS COVENANT, OR THE HOST MUNICIPALITY OR STORMWATER MANAGEMENT COMMISSION.

4. REFERENCE. THIS RESTRICTIVE COVENANT SHALL BE REFERENCED ON ALL DEEDS OR OTHER INSTRUMENTS OF CONVEYANCE FOR ALL LOTS OR PARCELS IN SAID MANORS OF BRAMPTON WOODS UNIT 2 SUBDIVISION.

   IN WITNESS WHEREOF THE UNDERSIGNED, THE FEE OWNERS, HAVE CAUSED THESE PRESENTS TO BE SIGNED AND ACKNOWLEDGED.

____

____
PRINTED NAME, TITLE AND DATE

____

____
PRINTED NAME, TITLE AND DATE

____

____
PRINTED NAME, TITLE AND DATE

VILLAGE BOARD CERTIFICATE

STATE OF ILLINOIS)
)SS
COUNTY OF LAKE)

THIS IS TO CERTIFY THAT THE VILLAGE BOARD OF THE VILLAGE OF LINCOLNSHIRE, ILLINOIS, HAS REVIEWED AND APPROVED THIS PLAT.

DATED AT LINCOLNSHIRE, LAKE COUNTY, ILLINOIS, THIS ____ DAY OF______________, A.D. 20__.

____
APPROVED

____
PRINTED NAME & TITLE

____
ATTEST

____
PRINTED NAME & TITLE

PUBLIC UTILITY AND DRAINAGE EASEMENT PROVISIONS

AN EASEMENT IS HEREBY RESERVED AND GRANTED OVER AND UNDER THE PLATTED AREAS HEREON NOTED AS "PUBLIC UTILITY AND DRAINAGE EASEMENT (P.U.D.E.)", AND THE PROPERTY DESIGNATED IN THE PLAT FOR STREETS TO THE VILLAGE OF LINCOLNSHIRE, TOGETHER WITH THEIR RESPECTIVE SUCCESSORS AND ASSIGNS, TO INSTALL, LAY, CONSTRUCT, RENEW, OPERATE AND MAINTAIN, CONDUITS, CABLES, WIRES, STREET LIGHTING, SEWERS, PIPES, SURFACE AND SUBSURFACE DRAINAGE, AND WATER MAINS, UNDERGROUND, WITH ALL NECESSARY MANHOLES, WATER VALVES AND OTHER EQUIPMENT FOR THE PURPOSE OF SERVING THE SAID REAL ESTATE WITH TELEPHONE, COMMUNICATIONS, ELECTRICITY, STREET LIGHTING, SEWER, GAS, WATER SERVICE, DRAINAGE, AND OTHER MUNICIPAL SERVICES, ALSO THERE IS HEREBY GRANTED THE RIGHT TO ENTER UPON THE SAID REAL ESTATE AT ALL TIMES TO INSTALL, LAY, CONSTRUCT, RENEW, OPERATE AND MAINTAIN WITHIN THE SAID REAL ESTATE SAID CONDUITS, CABLES, WIRES, MANHOLES, WATER VALVES, PIPES, SURFACE AND SUBSURFACE DRAINAGE, AND OTHER EQUIPMENT; THE RIGHT OF INGRESS AND EGRESS IS HEREBY GRANTED OVER, UPON AND THROUGH THE SAID REAL ESTATE OF EMERGENCY VEHICLES OF ANY AND ALL TYPES, FOR ANY PURPOSE WHATEVER, NO PERMANENT BUILDING SHALL HEREAFTER BE PLACED ON THE SAID EASEMENT, AS DETERMINED, BUT THE SAME MAY BE USED FOR GARDENS, SHRUBS, LANDSCAPING AND SUCH OTHER PURPOSES THAT THEN AND LATER DO NOT UNREASONABLY INTERFERE WITH THE USES OR THE RIGHTS HEREIN GRANTED.

COMMONWEALTH EDISON AND SBC EASEMENT PROVISIONS

AN EASEMENT FOR SERVING THE SUBDIVISION AND OTHER PROPERTY WITH ELECTRIC AND COMMUNICATION SERVICE IS HEREBY RESERVED FOR AND GRANTED TO:

COM ED COMPANY,
SBC COMPANY

THEIR RESPECTIVE LICENSEES, SUCCESSORS, AND ASSIGNS, JOINTLY AND SEVERALLY, TO CONSTRUCT, OPERATE, REPAIR, MAINTAIN, MODIFY, RECONSTRUCT, REPLACE, SUPPLEMENT, RELOCATE AND REMOVE, FROM TIME TO TIME, POLES, GUYS, ANCHORS, WIRES, CABLES, CONDUITS, MANHOLES, TRANSFORMERS, PEDESTALS, EQUIPMENT CABINETS OR OTHER, FACILITIES USED IN CONNECTION WITH OVERHEAD AND UNDERGROUND TRANSMISSION AND DISTRIBUTION OF ELECTRICITY COMMUNICATIONS, SOUNDS AND SIGNALS IN, OVER, UNDER, ACROSS, ALONG AND UPON THE SURFACE OF THE PROPERTY SHOWN WITHIN THE DASHED OR DOTTED LINES (OR SIMILAR DESIGNATION) ON THE PLAT AND MARKED "EASEMENT", "UTILITY EASEMENT", "PUBLIC UTILITY EASEMENT", "P.U.E." (OR SIMILAR DESIGNATION), THE PROPERTY DESIGNATED IN THE DECLARATION OF CONDOMINIUM AND/OR ON THIS PLAT AS "COMMON ELEMENTS", AND THE PROPERTY DESIGNATED ON THE PLAT AS "COMMON AREA OR AREAS", AND THE PROPERTY DESIGNATED ON THE PLAT FOR STREETS AND ALLEYS, WHETHER PUBLIC OR PRIVATE, TOGETHER WITH THE RIGHT TO INSTALL REQUIRED SERVICE CONNECTIONS OVER OR UNDER THE SURFACE OF EACH LOT AND COMMON AREA OR AREAS TO SERVE IMPROVEMENTS THEREON, OR ON ADJACENT LOTS, AND COMMON AREA OR AREAS, THE RIGHT TO CUT, TRIM OR REMOVE TREES, BUSHES, ROOTS AND SAPLINGS AND TO CLEAR OBSTRUCTIONS FROM THE SURFACE AND SUBSURFACE AS MAY BE REASONABLY REQUIRED INCIDENT TO THE RIGHTS HEREIN GIVEN, AND THE RIGHT TO ENTER UPON THE SUBDIVIDED PROPERTY FOR ALL SUCH PURPOSES. OBSTRUCTIONS SHALL NOT BE PLACED OVER GRANTEES' FACILITIES OR IN, UPON OR OVER THE PROPERTY WITHIN THE DASHED OR DOTTED LINES (OR SIMILAR DESIGNATION) MARKED "EASEMENT", "UTILITY EASEMENT", "PUBLIC UTILITY EASEMENT", "P.U.E." (OR SIMILAR DESIGNATION), WITHOUT THE PRIOR WRITTEN CONSENT OF GRANTEES. AFTER INSTALLATION OF ANY SUCH FACILITIES, THE GRADE OF THE SUBDIVIDED PROPERTY SHALL NOT BE ALTERED IN A MANNER SO AS TO INTERFERE WITH THE PROPER OPERATION AND MAINTENANCE THEREOF. THE TERM "COMMON ELEMENTS" SHALL HAVE THE MEANING SET FORTH IN SUCH TERM IN THE "CONDOMINIUM PROPERTY ACT", CHAPTER 765 ILCS 605/2, AS AMENDED FROM TIME TO TIME. THE TERM "COMMON AREA OR AREAS" IS DEFINED AS A LOT, PARCEL OR AREA OF REAL PROPERTY, THE BENEFICIAL USE AND ENJOYMENT OF WHICH IS RESERVED IN WHOLE AS AN APPORTIONMENT TO THE SEPARATELY OWNED LOTS, PARCEL OR AREAS WITHIN THE PLANNED DEVELOPMENT, EVEN THOUGH SUCH BE OTHERWISE DESIGNATED ON THE PLAT BY TERMS SUCH AS "OUTLOTS", "COMMON ELEMENTS", "OPEN SPACE", "OPEN AREA", "COMMON GROUND", "PARKING" AND "COMMON AREA". THE TERM "COMMON AREA OR AREAS", AND "COMMON ELEMENTS" INCLUDES REAL PROPERTY SURFACED WITH INTERIOR DRIVEWAYS AND WALKWAYS, BUT EXCLUDES REAL PROPERTY PHYSICALLY OCCUPIED BY A BUILDING, SERVICE BUSINESS DISTRICT OR STRUCTURES SUCH AS A POOL OR RETENTION POND OR MECHANICAL EQUIPMENT. RELOCATION OF FACILITIES WILL BE DONE BY GRANTEES AT COST OF GRANTOR/LOT OWNER, UPON WRITTEN REQUEST.

NICOR GAS EASEMENT PROVISIONS

AN EASEMENT FOR SERVING THE SUBDIVISION AND OTHER PROPERTY WITH NATURAL GAS SERVICE IS HEREBY RESERVED FOR AND GRANTED TO

NICOR GAS COMPANY

THEIR RESPECTIVE SUCCESSORS AND ASSIGNS, JOINTLY AND SEVERALLY, TO INSTALL, OPERATE, MAINTAIN AND REMOVE, FROM TIME TO TIME, FACILITIES USED IN CONNECTION WITH THE TRANSMISSION AND DISTRIBUTION OF NATURAL GAS IN, OVER, UNDER, ACROSS, ALONG AND UPON THE SURFACE OF THE PROPERTY SHOWN WITHIN THE DOTTED LINES ON THE PLAT AND MARKED "PUBLIC UTILITY & DRAINAGE EASEMENT", THE PROPERTY DESIGNATED IN THE DECLARATION OF CONDOMINIUM AND/OR ON THIS PLAT AS "COMMON ELEMENTS", AND THE PROPERTY DESIGNATED ON THE PLAT AS A "COMMON AREA OR AREAS", AND THE PROPERTY DESIGNATED ON THE PLAT FOR STREETS AND ALLEYS, WHETHER PUBLIC OR PRIVATE, TOGETHER WITH THE RIGHT TO INSTALL REQUIRED SERVICE CONNECTIONS OVER OR UNDER THE SURFACE OF EACH LOT AND COMMON AREA OR AREAS TO SERVE IMPROVEMENTS THEREON, OR ON ADJACENT LOTS, AND COMMON AREA OR AREAS TO SERVE IMPROVEMENTS THEREON, OR ON ADJACENT LOTS, AND COMMON AREA OR AREAS, THE RIGHT TO CUT, TRIM OR REMOVE TREES, BUSHES AND ROOTS AS MAY BE REASONABLY REQUIRED INCIDENT TO THE RIGHTS HEREIN GIVEN, AND THE RIGHT TO ENTER UPON THE SUBDIVIDED PROPERTY FOR ALL SUCH PURPOSES. OBSTRUCTIONS SHALL NOT BE PLACED OVER GRANTEES' FACILITIES OR IN, UPON OR OVER THE PROPERTY WITHIN THE DOTTED LINES MARKED "PUBLIC UTILITY & DRAINAGE EASEMENT" WITHOUT THE PRIOR WRITTEN CONSENT OF GRANTEES. AFTER INSTALLATION OF ANY SUCH FACILITIES, THE GRADE OF THE SUBDIVIDED PROPERTY SHALL NOT BE ALTERED IN A MANNER SO AS TO INTERFERE WITH THE PROPER OPERATION AND MAINTENANCE THEREOF. THE TERM "COMMON ELEMENTS" SHALL HAVE THE MEANING SET FORTH IN SUCH TERM IN THE "CONDOMINIUM PROPERTY ACT", CHAPTER 765 ILCS 605/2(E), AS AMENDED FROM TIME TO TIME. THE TERM "COMMON AREA OR AREAS" IS DEFINED AS A LOT, PARCEL OR AREA OF REAL PROPERTY, THE BENEFICIAL USE AND ENJOYMENT OF WHICH IS RESERVED IN WHOLE AS AN APPURTENANCE TO THE SEPARATELY OWNED LOTS, PARCEL OR AREAS WITHIN THE PLANNED DEVELOPMENT, EVEN THOUGH SUCH BE OTHERWISE DESIGNATED ON THE PLAT BY TERMS SUCH AS "OUTLOTS", "COMMON ELEMENTS", "OPEN SPACE", "OPEN AREA", "COMMON GROUND", "PARKING AND COMMON AREA". THE TERMS "COMMON AREA OR AREAS" AND "COMMON ELEMENTS" INCLUDES REAL PROPERTY SURFACED WITH INTERIOR DRIVEWAYS AND WALKWAYS, BUT EXCLUDES REAL PROPERTY PHYSICALLY OCCUPIED BY A BUILDING, SERVICE BUSINESS DISTRICT OR STRUCTURES SUCH AS A POOL OR RETENTION POND, OR MECHANICAL EQUIPMENT. RELOCATION OF FACILITIES WILL BE DONE BY GRANTEES AT COST OF GRANTOR/LOT OWNER, UPON WRITTEN REQUEST.

LANDSCAPE EASEMENT PROVISIONS

FOR THE BENEFIT OF AND GRANTED TO THE HOMEOWNERS ASSOCIATION AND ITS RESPECTIVE SUCCESSORS AND ASSIGNS OVER LOTS WHERE THE AREA IS SHOWN ON THE PLAT AND MARKED LANDSCAPE EASEMENT. SUCH EASEMENT SHALL BE FOR THE PURPOSE OF SCREENING, PROTECTING, AND SEPARATING SAID LOTS AND ROADWAYS WITH TREES, SHRUBS, BUSHES AND OTHER FORMS OF VEGETATION. NO PERMANENT BUILDING, STRUCTURE OR OTHER MEANS OF VEHICULAR ACCESS TO SUCH SLOTS SHALL BE CONSTRUCTED OR MAINTAINED ON, THROUGH, OR OVER THE AREA DESIGNATED ON THE LANDSCAPE EASEMENT.

COUNTY CLERK CERTIFICATE

STATE OF ILLINOIS)
)SS
COUNTY OF LAKE)

I, ______________________, COUNTY CLERK OF LAKE COUNTY, ILLINOIS DO HEREBY CERTIFY THAT THERE ARE NO DELINQUENT TAXES, NO UNPAID FORFEITED TAXES, AND NO REDEEMABLE TAX SALES AGAINST ANY OF THE LAND INCLUDED IN THE PLAT.

I FURTHER CERTIFY THAT I HAVE RECEIVED ALL STATUTORY FEES IN CONNECTION WITH THE PLAT.

GIVEN UNDER MY HAND AND SEAL OF THE COUNTY CLERK OF LAKE COUNTY, ILLINOIS,

THIS ______ DAY OF _______________, A.D. 20__.

____
COUNTY CLERK

____
PRINTED NAME

GRADING/DRAINAGE CERTIFICATE

TO THE BEST OF OUR KNOWLEDGE AND BELIEF, THE DRAINAGE OF SURFACE WATERS WILL NOT BE CHANGED BY THE CONSTRUCTION OF SUCH SUBDIVISION OR ANY PART THEREOF, OR, THAT IF SUCH SURFACE WATER WILL BE CHANGED, REASONABLE PROVISION HAS BEEN MADE FOR COLLECTION AND DIVERSION OF SUCH SURFACE WATERS INTO PUBLIC AREAS OR DRAINS WHICH THE SUBDIVIDER HAS A RIGHT TO USE, AND THAT SUCH SURFACE WATERS WILL BE PLANNED FOR IN ACCORDANCE WITH GENERALLY ACCEPTED ENGINEERING PRACTICES SO AS TO REDUCE THE LIKELIHOOD OF DAMAGE TO THE ADJOINING PROPERTY BECAUSE OF THE CONSTRUCTION OF THE SUBDIVISION.

DATED THIS ____ DAY OF ____________________, A.D. 20__.

BY: ______________________________
OWNER OR OWNER'S ATTORNEY

BY: ______________________________
XXXXXXX X. XXXXXXX
IL PROFESSIONAL ENGINEER NO. XX–XXXXXX
MANHARD CONSULTING LTD.

____
PRINTED NAME AND TITLE

DATED ________________

BY: ______________________________
OWNER OR OWNER'S ATTORNEY

____
PRINTED NAME AND TITLE

BY: ______________________________
OWNER OR OWNER'S ATTORNEY

____
PRINTED NAME AND TITLE

SURVEYOR'S CERTIFICATE

STATE OF ILLINOIS)
)SS
COUNTY OF LAKE)

THIS IS TO DECLARE THAT THE FOLLOWING DESCRIBED PROPERTY WAS SURVEYED AND SUBDIVIDED BY MANHARD CONSULTING, LTD., UNDER THE SUPERVISION OF AN ILLINOIS PROFESSIONAL LAND SURVEYOR AND THAT THE PLAT HEREON DRAWN IS A CORRECT REPRESENTATION OF SAID SURVEY:

THAT PART OF THE NORTHEAST QUARTER, OF SECTION 14, TOWNSHIP 43 NORTH, RANGE 11, EAST OF THE THIRD PRINCIPAL MERIDIAN, DESCRIBED AS FOLLOWS:

THE SOUTH 15 ACRES OF THE NORTH 45 ACRES OF THE EAST 1/2 OF THE NORTHEAST 1/4 OF SECTION 14, TOWNSHIP 43 NORTH, RANGE 11, EAST OF THE THIRD PRINCIPAL MERIDIAN, IN LAKE COUNTY, ILLINOIS.

SUBDIVIDED PROPERTY CONTAINS 14.547 ACRES, MORE OR LESS AND ALL DISTANCES ARE SHOWN IN FEET AND DECIMAL PARTS THEREOF.

IRON PIPES OR BARS, A MINIMUM OF 1/2" IN DIAMETER AND 18" LONG, SHALL BE SET AT ALL SUBDIVISION CORNERS, LOT CORNERS, POINTS OF CURVATURE, POINTS OF TANGENCY AND AT ALL ANGLE POINTS IN ANY LINE, LEVEL WITH THE ESTABLISHED GRADE, IN COMPLIANCE WITH ILLINOIS STATUTES AND APPLICABLE ORDINANCES, EXCEPT AS NOTED.

THIS IS ALSO TO DECLARE THAT THE PROPERTY AS DESCRIBED ON THE ANNEXED PLAT LIES WITHIN THE CORPORATE LIMITS OF THE VILLAGE OF LINCOLNSHIRE WHICH HAS ADOPTED A VILLAGE PLAN AND IS EXERCISING THE SPECIAL POWER AUTHORIZED BY DIVISION 12 OF ARTICLE 11 OF THE ILLINOIS MUNICIPAL CODE.

THIS IS ALSO TO DECLARE THAT THE FEDERAL EMERGENCY MANAGEMENT AGENCY FIRM COMMUNITY PANEL NUMBER 17097C0258K WITH AN EFFECTIVE DATE OF SEPTEMBER 18, 2013 INDICATES THAT THE ABOVE DESCRIBED PROPERTY LIES WITHIN AN AREA DESIGNATED AS ZONE X, (UNSHADED). ZONE X (UNSHADED) IS DEFINED AS AREAS DETERMINED TO BE OUTSIDE THE 500–YEAR FLOODPLAIN. THIS MAP DOES NOT NECESSARILY SHOW ALL AREAS SUBJECT TO FLOODING IN THE COMMUNITY OR ALL PLANIMETRIC FEATURES OUTSIDE SPECIAL FLOOD HAZARD AREAS. THIS DOES NOT GUARANTEE THAT THE SURVEYED PROPERTY WILL OR WILL NOT FLOOD.

GIVEN UNDER MY HAND AND SEAL THIS 18TH DAY OF FEBRUARY, A.D. 2015.

FOR REVIEW ONLY

____
ILLINOIS PROFESSIONAL LAND SURVEYOR NO. 035–003648
LICENSE EXPIRES NOVEMBER 30, 2016

JAMES D. BAKER
ILLINOIS PROFESSIONAL LAND SURVEYOR
NO. 3648
VERNON HILLS, ILLINOIS

DESIGN FIRM PROFESSIONAL REGISTRATION NO. 184003350–EXPIRES APRIL 30, 2015

DATE	REVISIONS	DRAWN BY

Manhard CONSULTING LTD
900 Woodlands Parkway, Vernon Hills, IL 60061 ph:847.634.5550 fx:847.634.0095 manhard.com
Civil Engineers • Surveyors • Water Resource Engineers • Water & Wastewater Engineers
Construction Managers • Environmental Scientists • Landscape Architects • Planners

MANORS OF WHYTEGATE
VILLAGE OF LINCOLNSHIRE, ILLINOIS
PRELIMINARY PLAT OF SUBDIVISION

PROJ. MGR.:	JDB
PROJ. ASSOC.:	LSM
DRAWN BY:	LSM
DATE:	11/07/13
SCALE:	N/A

© 2012 MANHARD CONSULTING, LTD. ALL RIGHTS RESERVED

October 6, 2015 – 14:38 Dwg Name: P:\Agcln3\dwg\Surv\Final Drawings\Plat of Subdivision\Preliminary Plat\04–AGCLN3–PR.dwg Updated By: lmoryl

Return to Agenda

Cardno Stormwater Seed Mix

Botanical Name	Common Name	Oz./Acre
PERMANENT GRASSES/SEDGES/RUSHES		
Carex cristatella	Crested Oval Sedge	1.00
Carex lurida	Bottlebrush Sedge	2.00
Carex vulpinoidea	Brown Fox Sedge	6.00
Elymus virginicus	Virginia Wild Rye	12.00
Glyceria striata	Fowl Manna Grass	1.25
Juncus effuses	Common Rush	1.00
Juncus torreyi	Torrey's Rush	0.25
Leersia oryzoides	Rice Cit Grass	1.00
Panicum virgatum	Switch Grass	8.00
Scirpus atrovirens	Dark Green Rush	1.00
Scirpus cyperinus	Wool Grass	0.50
Scirpus fluviatilis	River Bulrush	0.25
Scirpus validus	Great Bulrush	6.00
		40.25
TEMPORARY COVER		
Avena sativa	Common Oat	360.00
Lolium multiflorum	Annual Rye	100.00
		460.00
FORBS		
Alisma spp.	Water Plaintain Mix	4.25
Asclepias incarnate	Swamp Milkweed	1.50
Bidens spp.	Bidens Mix	2.00
Helenium autumnale	Sneezeweed	2.00
Lycopus americanus	Common Water Horehound	0.25
Mimulus ringens	Monkey Flower	1.00
Penthorum sedoides	Ditch Stonecrop	0.50
Polygonum penylvanicum	Pinkweed	4.00
Rudbeckia subtomentosa	Sweet Black-Eyed Susan	1.00
Sagittaria latifolia	Common Arrowhead	1.00
Senna hebecarpa	Wild Senna	1.00
Thalictrum dasycarpum	Purple Meadow Rue	2.00
		20.50

Apply at 32.5 pounds per acre

Cardno Swale Seed Mix

Botanical Name	Common Name	Oz./Acre
PERMANENT GRQASSES/SEDGES		
Andropogon gerardii	Big Bluestem	4.00
Carex comosa	Bristly Sedge	2.50
Carex cristatella	Crested Oval Sedge	2.00
Carex lurida	Bottlebrush Sedge	2.50
Carex spp.	Prairie Sedge Mix	8.00
Carex vulpinoidea	Brown Fox Sedge	4.00
Elymus virginicus	Virginia Wild Rye	8.00
Glyceria striata	Fowl Manna Grass	1.00
Panicum virgatum	Switch Grass	2.00
Scirpus atrovirens	Dark Green Rush	2.00
Scirpus cyperinus	Wool Grass	1.00
Spartina pectinate	Prairie Cord Grass	3.00
—	Total	40.00
TEMPORARY COVER		
Avena sativa	Common Oats	360.00
Lolium multiflorum	Annual Rye	100.00
	Total	460.00
FORBS		
Alisma spp.	Water Plantain (Various)	1.00
Asclepias incarnate	Swamp Milkweed	2.00
Aster novae-angliae	New England Aster	1.00
Coreopsis tripteris	Tall Coreopsis	1.00
Eupatorium maculatum	Spotted Joe-Pye Weed	0.25
Iris virginica	Blue Flag	4.00
Liatris spicata	Marsh Blazing Star	1.00
Lobelia cardinali	Cardinal Flower	0.25
Lobelia siphilitica	Great Blue Lobelia	0.50
Lycopus americanus	Common Water Horehound	0.25
Pycnanthemum virginianum	Common Mountain Mint	0.50
Rudbeckia triloba	Brown-Eyed Susan	0.50
Sagittaria latifolia	Common Arrowhead	0.25
Senna hebecarpa	Wild Senna	1.00
Silphium terebinthinaceum	Prairie Dock	1.00
Verbena hastate	Blue Vervain	1.50
Zizia aurea	Golden Alexanders	0.75
	Tota	16.75

Apply at 32.5 pounds per acre

Preliminary Plant List

Key	Quantity	Name COMMON/Botanical	Size	Comments
ACNI	3	`GREENCOLUMN BLACK MAPLE/ Acer nigrum 'Greencolumn'	2-1/2" BB	
ACRU	12	AUTUMN FLAME RED MAPLE/ Acer rubrum 'Autumn Maple'	2-1/2" BB	
ACSA	11	GREEN MOUNTAIN SUGAR MAPLE/ Acer saccharum 'Green Mountain'	2-1/2" BB	
ALGL	7	BLACK ALDER/ Alnus glutinosa	8' BB	
AMGR	5	AUTUMN BRILLANCE SERVICEBERRY/ Amelanchier grandiflora 'Autumn Brillance'	8' BB	Multi-stem Low Branched Form
CEOC	10	COMMON HACKBERRY/ Celtis occidentalis	2-1/2" BB	
COAP	36	CRANBERRY COTONEASTER/ Cotoneaster apiculatus	24"	Planted 3'-0" on center
GIBI	11	AUTUMN GOLD GINKGO/ Ginkgo biloba 'Autumn Gold'	2-1/2" BB	Male only
LITU	9	TULIP TREE/ Liriodendron tulipifera	2-1/2" BB	
MISI	22	PURPLE FLAME GRASS/ Miscnthus sinensis ' Purpurascens'	#5 Container	Planted 3'-0" on center
NYSY	9	BLACK TUPELO/ Nyssa sylvatica	2-1/2" BB	
PLAC	4	BLOODGOOD LONDON PLANETREE/ Platanus acerifolia 'Bloodgood'	2-1/2" BB	
QUBI	6	SWAMP WHITE OAK/ Quercus bicolor	2-1/2" BB	
RHAR	24	GRO_LOW SUMAC/ Rhus aromatica 'Gro-Low'	#5 Container	Planted 4'-0" on center
TADI	5	BALD CYPRESS/ Taxodium distichum	2-1/2" BB	

Village of Lincolnshire Required Landscaping

Street Trees

Briarwood Lane

2294.63 feet of total frontage (both sides)
1 tree per 40 feet = (57.3) = 57 trees

Riverwoods Road

492.96 feet (one side)
1 tree per 40 feet = (12.3) = 12 trees

Seeding Legend

IDOT CLASS 1 SEEDING TURF

Cardno Stormwater Seed Mix
Native Grasses

Cardno Swale Seed Mix
Native Grasses

Landscape Plan

Scale: 1" = 50'-0"

Manhard CONSULTING LTD

900 Woodlands Parkway, Vernon Hills, IL 60061 ph 847.634.5550 fx 847.634.0066 manhard.com
900 Ridgefield Drive • Suite 100 • Raleigh, NC 27609 ph 919.872.1086 fx 919.872.1089 manhard.com
Construction Managers • Environmental Scientists • Landscape Architects • Planners

MANORS OF WHYTEGATE RESIDENTIAL DEVELOPMENT
LINCOLNSHIRE, ILLINOIS
PRELIMINARY LANDSCAPE PLAN

PROJ. MGR.: JGC
PROJ. ASSOC.: DEM3
DRAWN BY: JBD
DATE: 5-21-15
SCALE: 1"=50'

SHEET 1 OF 1

AGCLN3

© 2015 MANHARD CONSULTING, LTD. ALL RIGHTS RESERVED

May 21, 2015 – 10:05 Dwg Name: P:\Admin\Vaher\Eng\Preliminary\LANDSCAPE-RENDER.dwg Updated By: bstehlorf

Return to Agenda

Cardno Stormwater Seed Mix

Botanical Name	Common Name	Oz./Acre
PERMANENT GRASSES/SEDGES/RUSHES		
Carex cristatella	Crested Oval Sedge	1.00
Carex lurida	Bottlebrush Sedge	2.00
Carex vulpinoidea	Brown Fox Sedge	6.00
Elymus virginicus	Virginia Wild Rye	12.00
Glyceria striata	Fowl Manna Grass	1.25
Juncus effuses	Common Rush	1.00
Juncus torreyi	Torrey's Rush	0.25
Leersia oryzoides	Rice Cit Grass	1.00
Panicum virgatum	Switch Grass	8.00
Scirpus atrovirens	Dark Green Rush	1.00
Scirpus cyperinus	Wool Grass	0.50
Scirpus fluviatilis	River Bulrush	0.25
Scirpus validus	Great Bulrush	6.00
		40.25
TEMPORARY COVER		
Avena sativa	Common Oat	360.00
Lolium multiflorum	Annual Rye	100.00
		460.00
FORBS		
Alisma spp.	Water Plaintain Mix	4.25
Asclepias incarnate	Swamp Milkweed	1.50
Bidens spp.	Bidens Mix	2.00
Helenium autumnale	Sneezeweed	2.00
Lycopus americanus	Common Water Horehound	0.25
Mimulus ringens	Monkey Flower	1.00
Penthorum sedoides	Ditch Stonecrop	0.50
Polygonum penylvanicum	Pinkweed	4.00
Rudbeckia subtomentosa	Sweet Black-Eyed Susan	1.00
Sagittaria latifolia	Common Arrowhead	1.00
Senna hebecarpa	Wild Senna	1.00
Thalictrum dasycarpum	Purple Meadow Rue	2.00
		20.50

Apply at 32.5 pounds per acre

Cardno Swale Seed Mix

Botanical Name	Common Name	Oz./Acre
PERMANENT GRQASSES/SEDGES		
Andropogon gerardii	Big Bluestem	4.00
Carex comosa	Bristly Sedge	2.50
Carex cristatella	Crested Oval Sedge	2.00
Carex lurida	Bottlebrush Sedge	2.50
Carex spp.	Prairie Sedge Mix	8.00
Carex vulpinoidea	Brown Fox Sedge	4.00
Elymus virginicus	Virginia Wild Rye	8.00
Glyceria striata	Fowl Manna Grass	1.00
Panicum virgatum	Switch Grass	2.00
Scirpus atrovirens	Dark Green Rush	2.00
Scirpus cyperinus	Wool Grass	1.00
Spartina pectinate	Prairie Cord Grass	3.00
—	Total	40.00
TEMPORARY COVER		
Avena sativa	Common Oats	360.00
Lolium multiflorum	Annual Rye	100.00
	Total	460.00
FORBS		
Alisma spp.	Water Plantain (Various)	1.00
Asclepias incarnate	Swamp Milkweed	2.00
Aster novae-angliae	New England Aster	1.00
Coreopsis tripteris	Tall Coreopsis	1.00
Eupatorium maculatum	Spotted Joe-Pye Weed	0.25
Iris virginica	Blue Flag	4.00
Liatris spicata	Marsh Blazing Star	1.00
Lobelia cardinali	Cardinal Flower	0.25
Lobelia siphilitica	Great Blue Lobelia	0.50
Lycopus americanus	Common Water Horehound	0.25
Pycnanthemum virginianum	Common Mountain Mint	0.50
Rudbeckia triloba	Brown-Eyed Susan	0.50
Sagittaria latifolia	Common Arrowhead	0.25
Senna hebecarpa	Wild Senna	1.00
Silphium terebinthinaceum	Prairie Dock	1.00
Verbena hastate	Blue Vervain	1.50
Zizia aurea	Golden Alexanders	0.75
	Tota	16.75

Apply at 32.5 pounds per acre

Preliminary Plant List

Key	Quantity	Name COMMON/Botanical	Size	Comments
ACNI	3	`GREENCOLUMN BLACK MAPLE/ Acer nigrum 'Greencolumn'	2-1/2" BB	
ACRU	12	AUTUMN FLAME RED MAPLE/ Acer rubrum 'Autumn Maple'	2-1/2" BB	
ACSA	11	GREEN MOUNTAIN SUGAR MAPLE/ Acer saccharum 'Green Mountain'	2-1/2" BB	
ALGL	7	BLACK ALDER/ Alnus glutinosa	8' BB	
AMGR	5	AUTUMN BRILLANCE SERVICEBERRY/ Amelanchier grandiflora 'Autumn Brillance'	8' BB	Multi-stem Low Branched Form
CEOC	10	COMMON HACKBERRY/ Celtis occidentalis	2-1/2" BB	
COAP	36	CRANBERRY COTONEASTER/ Cotoneaster apiculatus	24"	Planted 3'-0" on center
GIBI	11	AUTUMN GOLD GINKGO/ Ginkgo biloba 'Autumn Gold'	2-1/2" BB	Male only
LITU	8	TULIP TREE/ Liriodendron tulipifera	2-1/2" BB	
MISI	22	PURPLE FLAME GRASS/ Miscnthus sinensis ' Purpurascens'	#5 Container	Planted 3'-0" on center
NYSY	10	BLACK TUPELO/ Nyssa sylvatica	2-1/2" BB	
PIPU	5	COLORADO GREEN SPACE/ Picea pungens	6' BB	
PLAC	4	BLOODGOOD LONDON PLANETREE/ Platanus acerifolia 'Bloodgood'	2-1/2" BB	
QUBI	6	SWAMP WHITE OAK/ Quercus bicolor	2-1/2" BB	
RHAR	24	GRO_LOW SUMAC/ Rhus aromatica 'Gro-Low'	#5 Container	Planted 4'-0" on center
TADI	5	BALD CYPRESS/ Taxodium distichum	2-1/2" BB	
VIDE	20	ARROWWOOD VIBURNUM/ Viburnum dentatum	3'	Planted 4'-0" on center

Village of Lincolnshire Required Landscaping

Street Trees

Briarwood Lane

2294.63 feet of total frontage (both sides)
1 tree per 40 feet = (57.3) = 57 trees

Riverwoods Road

492.96 feet (one side)
1 tree per 40 feet = (12.3) = 12 trees

Seeding Legend

IDOT CLASS 1 SEEDING TURF

Cardno Stormwater Seed Mix
Native Grasses

Cardno Swale Seed Mix
Native Grasses

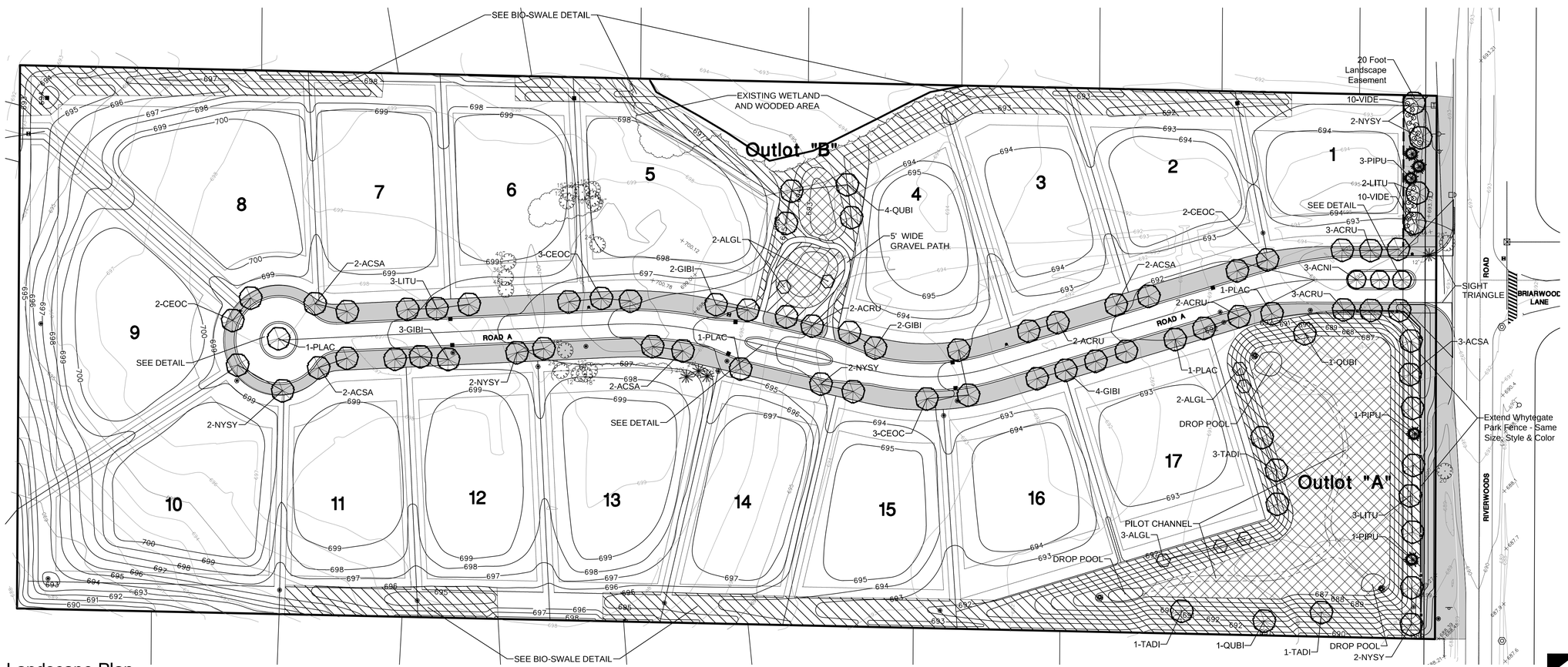

Landscape Plan

Scale: 1" = 50'-0"

NORTH

Manhard CONSULTING LTD

900 Woodlands Parkway, Vernon Hills, IL 60061 ph.847.834.5550 fx.847.834.0088 manhard.com
Civil Engineers • Surveyors • Water Resource Engineers • Water Treatment Specialists • Planners
Construction Managers • Environmental Scientists • Landscape Architects • Planners

DATE	REVISIONS	DRAWN BY
8/3/15	ADD LANDSCAPE EASEMENT	JBD

MANORS OF WHYTEGATE RESIDENTIAL DEVELOPMENT
LINCOLNSHIRE, ILLINOIS
PRELIMINARY LANDSCAPE PLAN

PROJ. MGR.: JGC
PROJ. ASSOC.: DEM3
DRAWN BY: DEM3
DATE: 3-17-15
SCALE: 1"=50'

SHEET 1 OF 2

AGCLN3

© 2015 MANHARD CONSULTING, LTD. ALL RIGHTS RESERVED

August 3, 2015 – 13:41 Dwg Name: P:\Jobs3\Vol3\Eng\Preliminary\LANDSCAPE.dwg Updated By: bdethlorf

Return to Agenda

PLANTING DETAILS

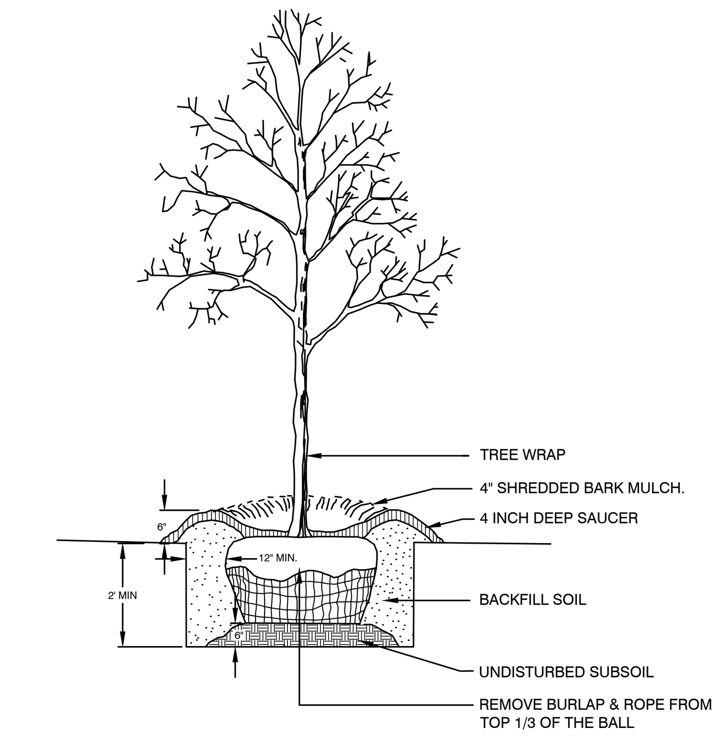

NOTE:
1. SEE LANDSCAPE NOTES FOR THE TYPE OF MULCH MATERIAL TO USE.

DECIDUOUS TREE

NOT TO SCALE

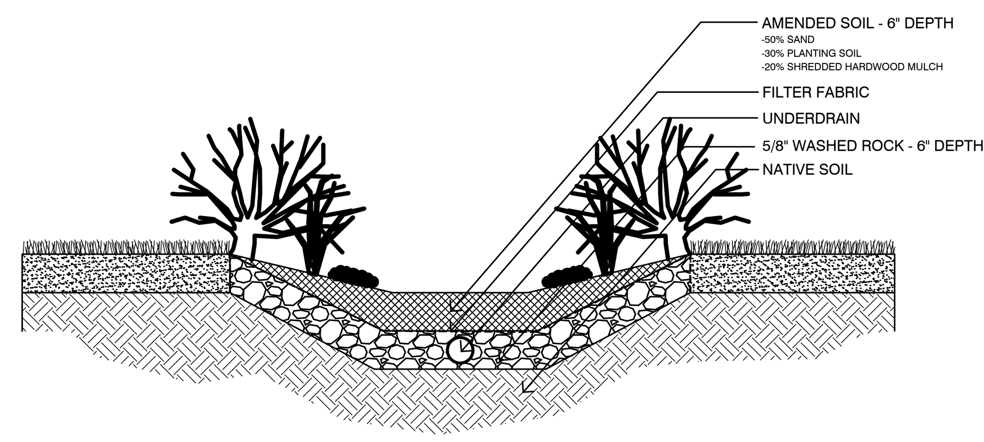

BIOSWALE

NOT TO SCALE

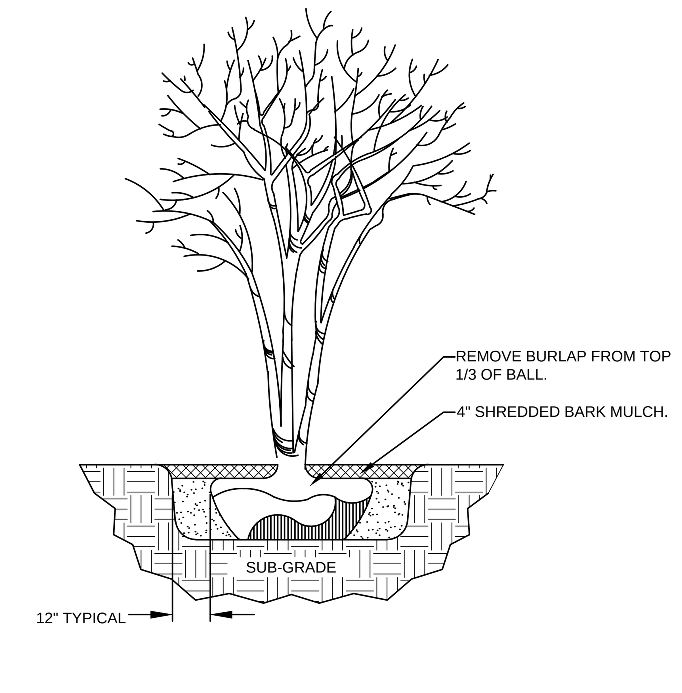

NOTE
1. PLANTING PITS TO BE SCAREIFIED BEFORE TREES ARE PLANTED.
2. PRUNING OF ORNAMENTAL TREES MUST BE DONE AFTER PLANTING AND AT THE DIRECTION OF THE LANDSCAPE ARCHITECT.

ORNAMENTAL TREE

NOT TO SCALE

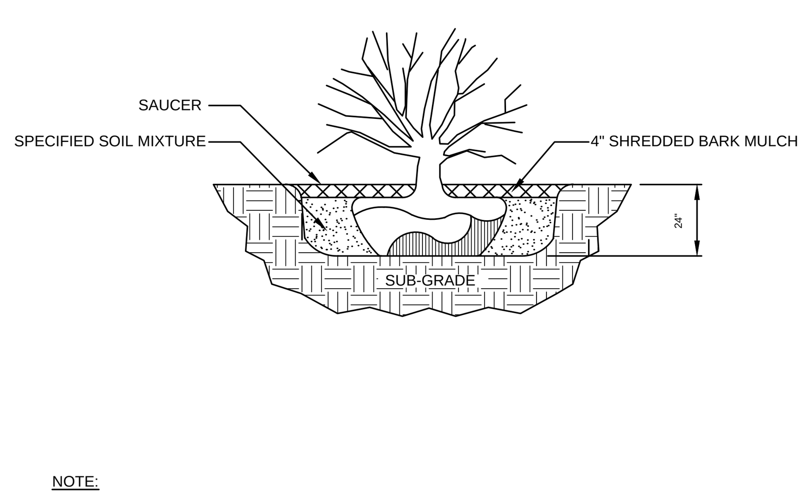

NOTE:
1. SHRUB SHALL BEAR SAME RELATION TO FINISHED GRADE AS IT BORE TO PREVIOUS EXISTING GRADE.

SHRUB PLANTING

NOT TO SCALE

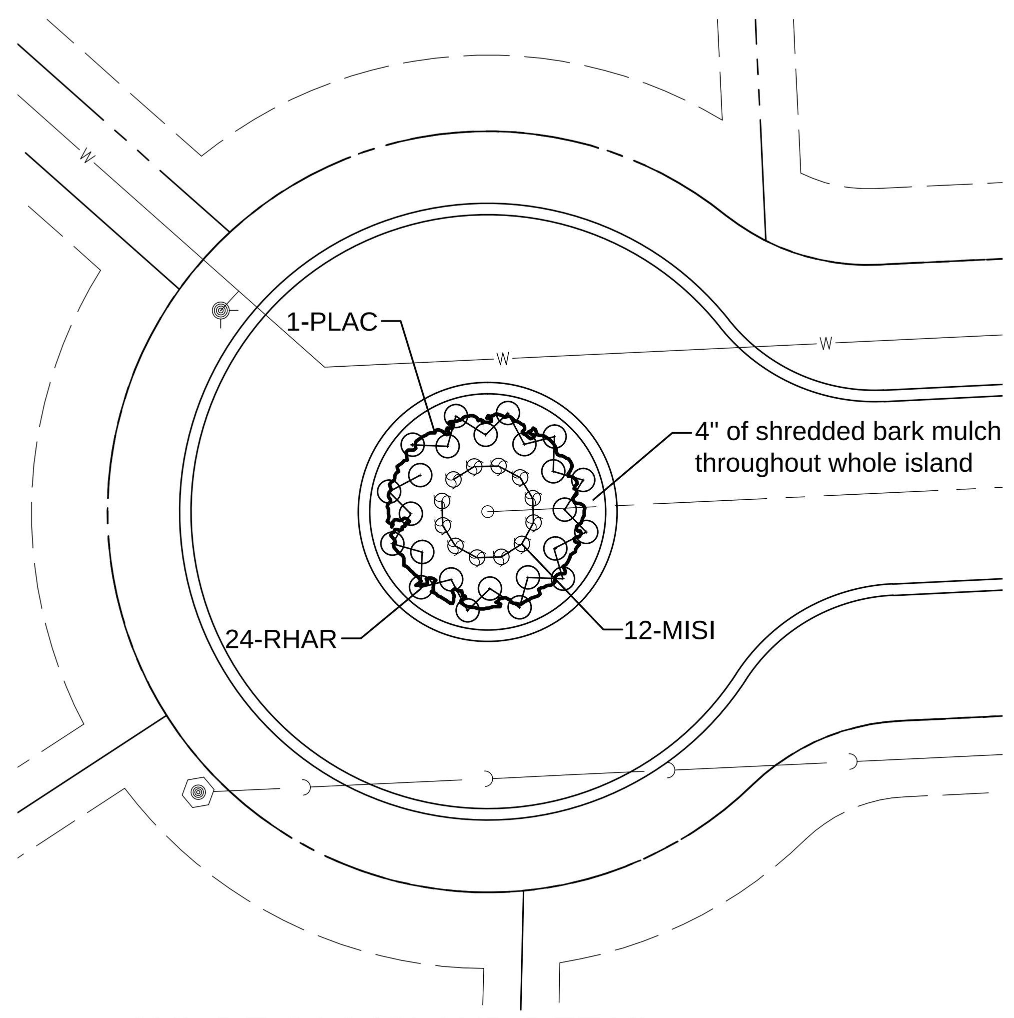

CUL-DE-SAC ISLAND DETAIL

1" = 20'-0"

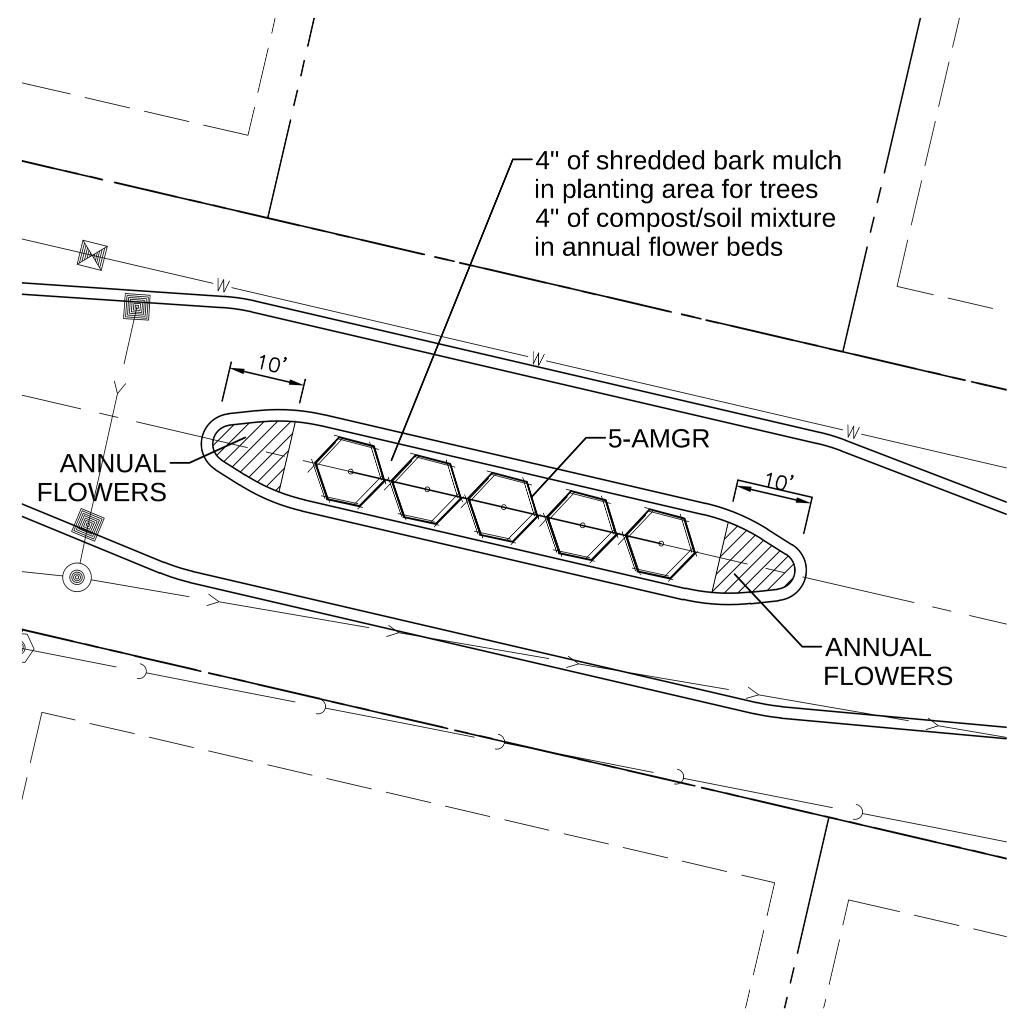

MIDDLE ISLAND DETAIL

1" = 20'-0"

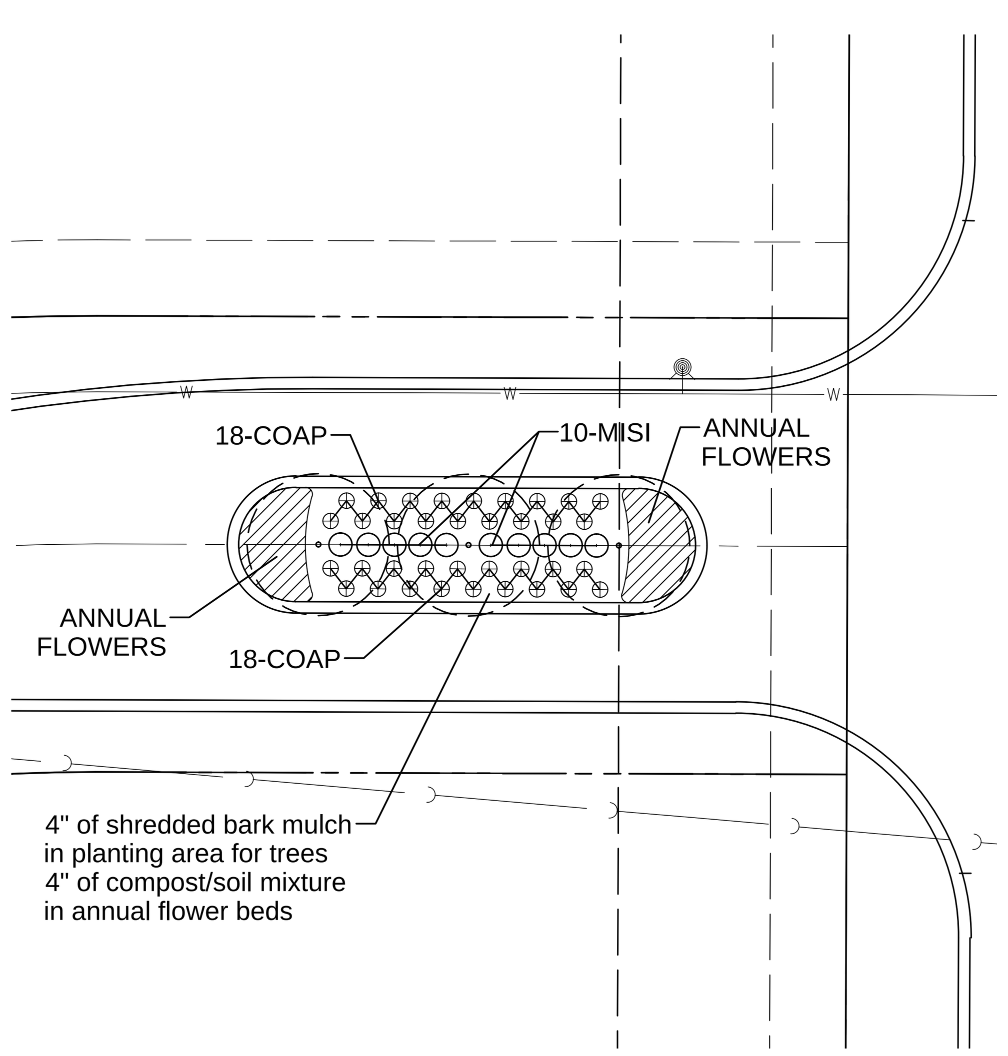

ENTRY ISLAND DETAIL

1" = 20'-0"

SPECIFICATIONS

1. Field Verification The Contractor shall verify all existing conditions and dimensions in the field prior to bidding and report any discrepancies to the Owner or his representative.

2. Protection of Existing Site and Existing Site Features The Contractor shall provide at his/her own expense, protection against trespassing and damage to seeded areas, planted areas and other construction areas until the preliminary acceptance. The Contractor shall provide barricades, temporary fencing, signs, written warning or policing as may be required to protect such areas. The Contractor shall not be responsible for any damage caused by the Owner after such warning has been issued. It shall be the Contractor's responsibility to locate and protect all existing above and below ground utilities when performing the work. The Contractor shall be responsible for the protection of crowns, trunks and roots of existing trees, shrubs, lawns, paved areas and other landscaped areas that are to remain. Existing trees which may be subject to construction damage shall be boxed, fenced or otherwise protected before any work is started. Boxing or other protection will be removed at the end of construction. Do not locate heavy equipment or stockpiles within the drip-line of existing plants or on lawns. Any damage to utilities, structures, plantings or lawn which results from the Contractor's work shall be repaired in kind at the Contractor's expense immediately with as little inconvenience to the Owner as possible. All areas shown on the plan as sod, the General Contractor will provide the Landscape Contractor with an excavated area 2" below the curb elevation and proposed grade. It is the Landscape Contractor's responsibility to verify with the General Contractor that the subgrade preparation has been completed. The Landscape Contractor shall coordinate his/her work with all other trades on site. Any planting areas disturbed as a result of general construction activity shall be immediately repaired/replaced by the Landscape Contractor at no additional expense to the Owner.

3. Planting Techniques All planting techniques and methods shall be consistent with the latest edition of "Horticulture Standards of Nurserymen, Inc.", and as detailed on these drawings. All deciduous plant material shall be thin pruned to remove 1/3 interior branches, dead branches and broken branches. Pruning shall compliment plants natural form. Absolutely NO tip pruning is allowed, except hedges. Any plant that is tip pruned is subject to rejection by the Landscape Architect. Evergreen trees and shrubs shall be pruned of dead and broken branches and as directed by the Landscape Architect. All pruning work shall be done with hand pruners only. Stake/guy all trees as necessary immediately after installation and prior to acceptance. When high winds or other conditions occur, the Landscape Contractor shall take whatever precautions he/she deems necessary to protect the survival and appearance of the plants. These steps shall be taken at no additional expense to the Owner.

4. Inspection of Plant Material All plant materials shall be subject to inspection and approval. The Landscape Architect/Owners Representative reserves the right to reject any plants which fail to meet this inspection. All rejected material shall be removed from the site by the Contractor. Height of evergreen trees are measured from the top of ball to the first lateral branch closest to the top. Height and/or width of other plants so specified are measured by the mass of the plant not the very tip of the branches.

5. Plant Substitution Substitution from the specified list will be accepted only when evidence in writing is submitted to the Landscape Architect, showing that the plant specified is not available. Requests for approval of substitute plant material shall include common and botanical names and size of substitute material. Only those substitutions of at least equivalent size and having essential characteristics similar to the originally specified material will be approved. Acceptance or rejection of substitute plant materials will be issued in writing by the Landscape Architect.

6. Planting Soil Planting soil shall be replaced in all disturbed areas at a minimum depth of six inches. The planting soil shall be amended by the contractor at the time of placement. The amended topsoil shall consist of three parts topsoil, one part compost, one part sand and five pounds of bone meal per cubic yard.

7. Mulch All disturbed areas including shrub beds and individual trees shall be mulched with a minimum of 4" finely shredded bark mulch to be approved by the Landscape Achitect/Owners Representative. Perennial, ground cover and annual flower beds shall be mulched with 2" of finely ground compost.

8. Pre-emergent Herbicide All shrub beds, individual tree rings and ground cover beds shall be treated with a pre-emergent herbicide prior to the mulch being installed. These areas shall be weed free prior to herbicide application.

9. Sodding Sod shall be Kentucky Bluegrass and is required in all areas as noted on the landscape plan. Sod should be grown from at least four varieties of quality seed. Sodded slopes 3:1 or greater shall be staked to prevent erosion and washout. Sod is to be laid within 8 hours of the delivery time to the site. Watering shall continue until all sod areas are thoroughly knit to the ground.

10. Seeding All lawn areas on landscape plan specified to be seeded shall be treated as specified below:

A. Topsoil Shall be spread over all areas to be seeded to a minimum depth of 6" when compacted.

B. Seed Mixture and Application Rate

Kentucky Bluegrass (4 varieties)	60%
Perennial Ryegrass	20%
Redtop or Creeping Red Fescue	20%

Apply at the rate of 5.5 lbs. per 1,000 sq. ft.

C. Fertilization The contractor shall acquire site specific soil analysis from a reputable firm, amend soil, and fertilize all area per the findings of the analysis. The contractor shall supply the Landscape Architect with all findings, analysis, and recommendations. Apply fertilizers and conditioners at the rate specified per soil test findings. At least 40% of the fertilizer nitrogen shall be of an organic origin.

D. Watering Seeded areas shall be watered to insure proper germination. Once seeds have germinated, watering may be decreased but the seedlings must never be allowed to dry out completely. Frequent watering should be continued for approximately four (4) weeks after germination or until grass has become sufficiently established to warrant watering on an "as needed" basis. All plant material watering will be the responsibility of the contractor until acceptance by the owner and the Landscape Architect/Owners Representative.

E. Establishment Turf may be established on a variety of slope conditions. It shall be the contractor's responsibility to determine and implement whatever procedures he/she deems necessary to establish the turf as part of his/her work. Seeded areas will be accepted when all areas show a uniform stand of the specified grass in healthy condition and at least 60 days have elapsed since the completion of this work. A uniform stand is defined as areas where the grass is growing thickly without bare spots larger than 12" x 12". The Contractor shall submit with his bid a description of the methods and procedures he/she intends to use.

11. Preliminary Acceptance All plantings shall be maintained by the Contractor for a period of 60 days after preliminary acceptance by the Owner. Maintenance shall include, but is not limited to, mowing and edging turf, pulling weeds, watering turf and plant material, and annual flower maintenance.

12. Final Acceptance Final acceptance will be granted by the Landscape Architect/Owners Representative upon receipt of written request by the contractor, combined with an acceptable final review of the installation by the Landscape Architect/Owners Representative. All plant material (excluding annual flowers), shall be guaranteed for two years after the end of the 60 day maintenance period. The end of the maintenance period is marked by the final acceptance of the Contractor's work by the Owner, and the Landscape Architect/Owners Representative. All plants that are not vigorous, healthy and in good condition shall be replaced by the Landscape Contractor at no additional expense to the Owner. These replacement plants shall meet all specified qualities of the original plant materials and carry the same guarantee from the time of replacement.

13. Site Cleanup The Contractor shall protect the property of the Owner and the work of other Contractors. The Contractor shall also be directly responsible for all damage caused by his/her activities at no additional expense to the owner and for the daily removal of all trash and debris from the work area to the satisfaction of the Landscape Architect/Owners Representative.

DATE	REVISIONS	DRAWN BY	CHECK BY

Manhard CONSULTING LTD
900 Woodlands Parkway, Vernon Hills, IL 60061 tel: (847) 634 5550 fax: (847) 634 0095 www.manhard.com
Civil Engineers · Surveyors · Water Resources Engineers · Water & Wastewater Engineers
Construction Managers · Environmental Scientists · Landscape Architects · Planners

MANORS OF WHYTEGATE RESIDENTIAL DEVELOPMENT

LINCOLNSHIRE, ILLINOIS

PRELIMINARY LANDSCAPE DETAILS & SPECIFICATIONS

PROJ. MGR.:
PROJ. ASSOC.:
DRAWN BY:
CHECKED BY:
DATE:
SCALE:

SHEET 2 OF 2

© 2007 ALL RIGHTS RESERVED

April 10, 2015 – 09:51 Dwg Name: P:\Agcln3\dwg\Eng\Preliminary\LANDSCAPE-DET.dwg Updated By: RHolland

Return to Agenda

Proposed Improvements for MANORS OF WHYTEGATE

LINCOLNSHIRE, ILLINOIS

STANDARD SYMBOLS

08-01-14

EXISTING		PROPOSED
	STORM SEWER	
	SANITARY SEWER	
	COMBINED SANITARY SEWER	
FM	FORCEMAIN	FM
	DRAINTILE	
W	WATER MAIN	W
E	ELECTRIC	E
G	GAS	G
T	TELEPHONE	T
	SANITARY MANHOLE	
	STORM MANHOLE	
	CATCH BASIN	
	STORM INLET	
	CLEANOUT	
	HAY BALES	
	RIP RAP	
	VALVE IN VAULT	
	VALVE IN BOX	
	FIRE HYDRANT	
	BUFFALO BOX	
	FLARED END SECTION	
	STREET LIGHT	
	SUMMIT / LOW POINT	S/L
795.20 / 790.25	RIM ELEVATION / INVERT ELEVATION	795.25 / 790.20
	DITCH OR SWALE	
	DIRECTION OF FLOW	
	OVERFLOW RELIEF SWALE	
764	1 FOOT CONTOURS	764
	CURB AND GUTTER	*
	DEPRESSED CURB AND GUTTER	
	REVERSE CURB AND GUTTER	
	SIDEWALK	
	DETECTABLE WARNINGS	
	PROPERTY LINE	
	EASEMENT LINE	
	SETBACK LINE	
	MAIL BOX	
	SIGN	
	TRAFFIC SIGNAL	
	POWER POLE	
	GUY WIRE	
	GAS VALVE	
	HANDHOLE	
E	ELECTRICAL EQUIPMENT	
T	TELEPHONE EQUIPMENT	
	CHAIN-LINK FENCE	
792.80	SPOT ELEVATION	792.8
	BRUSH/TREE LINE	
16"	DECIDUOUS TREE WITH TRUNK DIA. IN INCHES (TBR)	16"
25'	CONIFEROUS TREE WITH HEIGHT IN FEET (TBR)	25'
S	SILT FENCE	S
	RETAINING WALL	
	WETLAND	

ABBREVIATIONS

08-01-14

ADJ	ADJUST	FM	FORCE MAIN	R.O.W.	RIGHT-OF-WAY
AGG.	AGGREGATE	G	GROUND	RCP	REINFORCED CONCRETE PIPE
ARCH	ARCHITECT	GAS	GAS	REM	REMOVAL
B.A.M.	BITUMINOUS AGGREGATE MIXTURE	G/F	GRADE AT FOUNDATION	REV	REVERSE
B-B	BACK TO BACK	G/WALL	GRADE AT WALL	RR	RAILROAD
B/P	BOTTOM OF PIPE	GW	GUY WIRE	RT	RIGHT
B/W	BACK OF WALK	HDWL	HEADWALL	SAN	SANITARY
B-BOX	BUFFALO BOX	HH	HANDHOLE	SF	SQUARE FOOT
BIT.	BITUMINOUS	HWL	HIGH WATER LEVEL	SHLD.	SHOULDER
BM	BENCHMARK	HYD.	HYDRANT	SL	STREET LIGHT
B.O.	BY OTHERS	INL	INLET	SMH	SANITARY MANHOLE
C.E.	COMMERCIAL ENTRANCE	INV.	INVERT	ST	STORM
CB	CATCH BASIN	IP	IRON PIPE	STA.	STATION
CL	CENTERLINE	MAX.	MAXIMUM	STD	STANDARD
CMP	CORRUGATED METAL PIPE	MB	MAILBOX	SW	SIDEWALK
CNTRL	CONTROL	M/E	MEET EXISTING	SY	SQUARE YARDS
C.O.	CLEANOUT	MH	MANHOLE	TBR	TO BE REMOVED
CONC.	CONCRETE	MIN.	MINIMUM	T	TELEPHONE
CY	CUBIC YARD	NWL	NORMAL WATER LEVEL	T-A	TYPE A
D	DITCH	P.E.	PRIVATE ENTRANCE	T/C	TOP OF CURB
DIA.	DIAMETER	PC	POINT OF CURVATURE	T/F	TOP OF FOUNDATION
DIP	DUCTILE IRON PIPE	PCC	POINT OF COMPOUND CURVE	T/P	TOP OF PIPE
DIWM	DUCTILE IRON WATER MAIN	PGL	PROFILE GRADE LINE	T/W	TOP OF WALK
DS	DOWNSPOUT	PI	POINT OF INTERSECTION	T/WALL	TOP OF WALL
DT	DRAIN TILE	PL	PROPERTY LINE	TEMP	TEMPORARY
E	ELECTRIC	PP	POWER POLE	TRANS	TRANSFORMER
E-E	EDGE TO EDGE	PROP.	PROPOSED	V.B.	VALVE BOX
ELEV.	ELEVATION	PT	POINT OF TANGENCY	VCP	VITRIFIED CLAY PIPE
E/P	EDGE OF PAVEMENT	PVC	POLYVINYL CHLORIDE PIPE	V.V.	VALVE VAULT
EX.	EXISTING	PVC	POINT OF VERTICAL CURVATURE	WL	WATER LEVEL
F.E.	FIELD ENTRANCE	PVI	POINT OF VERTICAL INTERSECTION	WM	WATER MAIN
F-F	FACE TO FACE	PVT	POINT OF VERTICAL TANGENCY		
F.F.	FINISHED FLOOR	P	PAVEMENT		
FES	FLARED END SECTION	P.U.D.E.	PUBLIC UTILITY & DRAINAGE EASEMENT		
F/L	FLOW LINE	R	RADIUS		

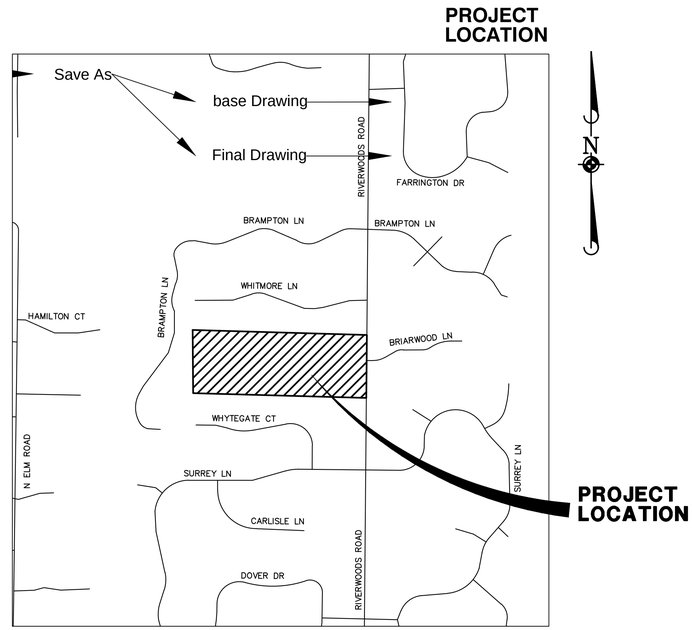

LOCATION MAP

N.T.S.

INDEX OF SHEETS

SHEET NO.	DESCRIPTION
1	TITLESHEET
2	EXISTING CONDITIONS AND DEMOLITION PLAN
3	SOIL AND SEDIMENT EROSION CONTROL PLAN
4	GRADING PLAN
5	UTILITY PLAN
6	CONSTRUCTION DETAILS
7	CONSTRUCTION DETAILS
8	SPECIFICATIONS

BENCHMARKS:

SOURCE BENCHMARK: SOUTHEAST HEADBOLT ON HYDRANT LOCATED ON THE SOUTH SIDE OF BRAMPTON LANE APPROXIMATELY 25' EAST OF THE EAST BOUNDRY LINE OF MANORS OF BRAMPTON WOODS UNIT 1, APPROXIMATELY 500' NORTH OF THE NORTHEAST CORNER OF UNIT 2.

EVEVATION=694.57

SITE BENCHMARK 1: SOUTHWEST BOLT ON 1ST. HYDRANT NORTH OF BRIARWOOD LANE

ELEVATION=693.25

SITE BENCHMARK 2: NORTHEAST BOLT ON 1ST. HYDRANT SOUTH OF BRIARWOOD LANE

ELEVATION=690.78

NOTES:

1. THE TOPOGRAPHIC SURVEY FOR THIS PROJECT IS BASED ON A FIELD SURVEY PREPARED BY MANHARD CONSULTING, LTD. AND WAS PERFORMED ON FEBRUARY 4, 2014. THE CONTRACTOR SHALL VERIFY THE EXISTING CONDITIONS PRIOR TO CONSTRUCTION AND SHALL IMMEDIATELY NOTIFY MANHARD CONSULTING AND THE CLIENT IN WRITING OF ANY DIFFERING CONDITIONS.

Manhard CONSULTING LTD™
900 Woodlands Parkway, Vernon Hills, IL 60061 ph:847.634.5550 fx:847.634.0095 manhard.com
Civil Engineers • Surveyors • Water Resource Engineers • Water & Wastewater Engineers
Construction Managers • Environmental Scientists • Landscape Architects • Planners

MANHARD CONSULTING, LTD. IS NOT RESPONSIBLE FOR THE SAFETY OF ANY PARTY AT OR ON THE CONSTRUCTION SITE. SAFETY IS THE SOLE RESPONSIBILITY OF THE CONTRACTOR AND ANY OTHER PERSON OR ENTITY PERFORMING WORK OR SERVICES. NEITHER THE OWNER NOR ENGINEER ASSUMES ANY RESPONSIBILITY FOR THE JOB SITE SAFETY OF PERSONS ENGAGED IN THE WORK OR THE MEANS OR METHODS OF CONSTRUCTION.

JULIE ILLINOIS ONE-CALL SYSTEM
Simply Call 811

UTILITY CONTACTS	
ELECTRIC COMMONWEALTH EDISON CO. 1500 FRANKLIN BLVD LIBERTYVILLE, IL 60048 (847) 816-5503 CONTACT:	WATER VILLAGE OF LINCOLNSHIRE 205 SCHELTER ROAD LINCOLNSHIRE, IL 60069 (847) 883-8600 CONTACT:
GAS NORTH SHORE GAS 3001 GRAND AVENUE WAUKEGAN, IL 60085 (847) 263-4666 CONTACT:	TELEPHONE SBC 1200 N. ARLINGTON HEIGHTS RD ARLINGTON HEIGHTS, IL 60004 (847) 506-8700 CONTACT:
SEWER VILLAGE OF LINCOLNSHIRE 205 SCHELTER ROAD LINCOLNSHIRE, IL 60069 (847) 883-8600 CONTACT:	

SEAL

DATE	REVISIONS	DRAWN BY

MANORS OF WHYTEGATE
LINCOLNSHIRE, ILLINOIS
TITLESHEET

PROJ. MGR.: JGC
PROJ. ASSOC.: DEM3
DRAWN BY: DEM3
DATE: 3-17-15
SCALE: N.T.S.

SHEET 1 OF 8

AGCLN3 #

© 2015 MANHARD CONSULTING, LTD. ALL RIGHTS RESERVED

August 10, 2015 - 08:56 Dwg Name: P:\Acad3\Vlad\Eng\Preliminary\Titlesheet.dwg Updated By: dmcphordii

Return to Agenda

MATCH LINE
SEE BELOW RIGHT

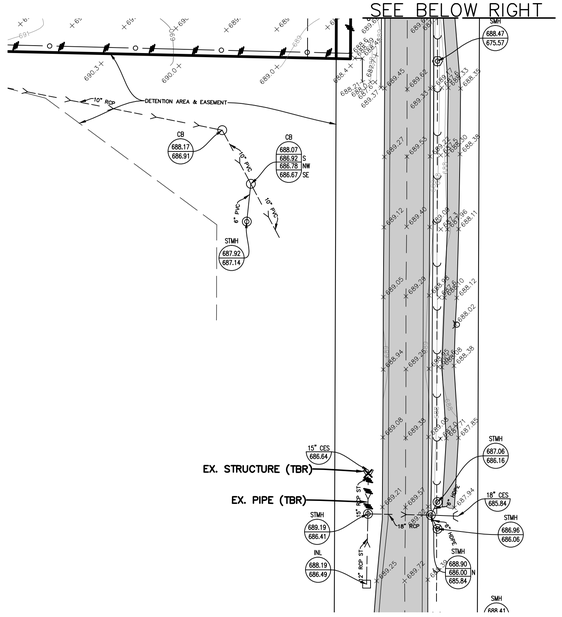

06-01-14

DEMOLITION LEGEND

- PAVEMENT AND BASE TO BE REMOVED
- BUILDING TO BE REMOVED
- STONE, GRAVEL, SAND AND MISCELLANEOUS DEBRIS TO BE REMOVED
- FENCE, RETAINING WALL, RAILROAD TIES, POLES, CURB AND GUTTER, ETC. TO BE REMOVED
- UTILITY STRUCTURE TO BE REMOVED
- UTILITY LINE REMOVAL
- TREE TO BE REMOVED
- TBR — TO BE REMOVED

06-01-14

DEMOLITION NOTES:

1. THE CONTRACTOR SHALL COORDINATE WITH RESPECTIVE UTILITY COMPANIES PRIOR TO THE REMOVAL AND/OR RELOCATION OF UTILITIES. THE CONTRACTOR SHALL COORDINATE WITH THE UTILITY COMPANY CONCERNING PORTIONS OF WORK WHICH MAY BE PERFORMED BY THE UTILITY COMPANY'S FORCES AND ANY FEES WHICH ARE TO BE PAID TO THE UTILITY COMPANY FOR THEIR SERVICES. THE CONTRACTOR IS RESPONSIBLE FOR PAYING FOR ALL FEES AND CHARGES.
2. SHOULD REMOVAL AND/OR RELOCATION ACTIVITIES DAMAGE FEATURES INDICATED TO REMAIN, THE CONTRACTOR SHALL PROVIDE NEW MATERIALS/STRUCTURES IN ACCORDANCE WITH THE CONTRACT DOCUMENTS. EXCEPT FOR MATERIALS DESIGNED TO BE RELOCATED ON THIS PLAN, ALL OTHER CONSTRUCTION MATERIALS SHALL BE NEW.
3. PRIOR TO DEMOLITION OCCURRING, ALL EROSION CONTROL DEVICES ARE TO BE INSTALLED.
4. ALL EXISTING UTILITY LINES AND CONDUITS LOCATED UNDER PROPOSED BUILDINGS SHALL BE REMOVED AND PROPERLY BACKFILLED. ALL UTILITY LINES AND CONDUITS LOCATED UNDER DRIVES, ON-SITE ROADS, PARKING LOTS OR SIDEWALKS SHALL BE FILLED WITH A FLOWABLE BACKFILL AND END PLUGGED. ALL EXISTING STRUCTURES SHALL BE REMOVED. ALL EXISTING UTILITY LINES LOCATED UNDER LANDSCAPE AREAS SHALL BE LEFT IN PLACE AND PLUGGED AT ALL STRUCTURES.
5. THE CONTRACTOR SHALL PERFORM ALL DEMOLITION WORK IN ACCORDANCE WITH ALL APPLICABLE FEDERAL, STATE AND LOCAL REQUIREMENTS.
6. THE CONTRACTOR IS RESPONSIBLE FOR DEMOLITION, REMOVAL AND DISPOSAL (IN A LOCATION APPROVED BY ALL GOVERNING AUTHORITIES) OF ALL STRUCTURES, PADS, WALLS, FLUMES, FOUNDATIONS, PARKING, DRIVES, DRAINAGE STRUCTURES, UTILITIES, ETC., SUCH THAT THE IMPROVEMENTS SHOWN ON THESE PLANS CAN BE CONSTRUCTED. ALL FACILITIES TO BE REMOVED SHALL BE UNDERCUT TO SUITABLE MATERIAL AND BROUGHT TO GRADE WITH SUITABLE COMPACTED FILL MATERIAL PER THE SPECIFICATIONS.
7. THE CONTRACTOR IS RESPONSIBLE FOR REMOVING ALL DEBRIS FROM THE SITE AND DISPOSING THE DEBRIS IN A LAWFUL MANNER.
8. THE CONTRACTOR IS RESPONSIBLE FOR OBTAINING ALL PERMITS REQUIRED FOR DEMOLITION AND DISPOSAL.
9. ELECTRICAL, TELEPHONE, CABLE, WATER, FIBER OPTIC CABLE AND/OR GAS LINES NEEDING TO BE REMOVED SHALL BE COORDINATED BY THE CONTRACTOR WITH THE AFFECTED UTILITY COMPANY.
10. CONTRACTOR MUST PROTECT THE PUBLIC AT ALL TIMES WITH FENCING, BARRICADES, ENCLOSURES, AND OTHER APPROPRIATE BEST MANAGEMENT PRACTICES.
11. CONTINUOUS ACCESS SHALL BE MAINTAINED FOR SURROUNDING PROPERTIES AT ALL TIMES DURING DEMOLITION.

N

GRAPHIC SCALE

50 0 25 100 200

SCALE: 1"=50'

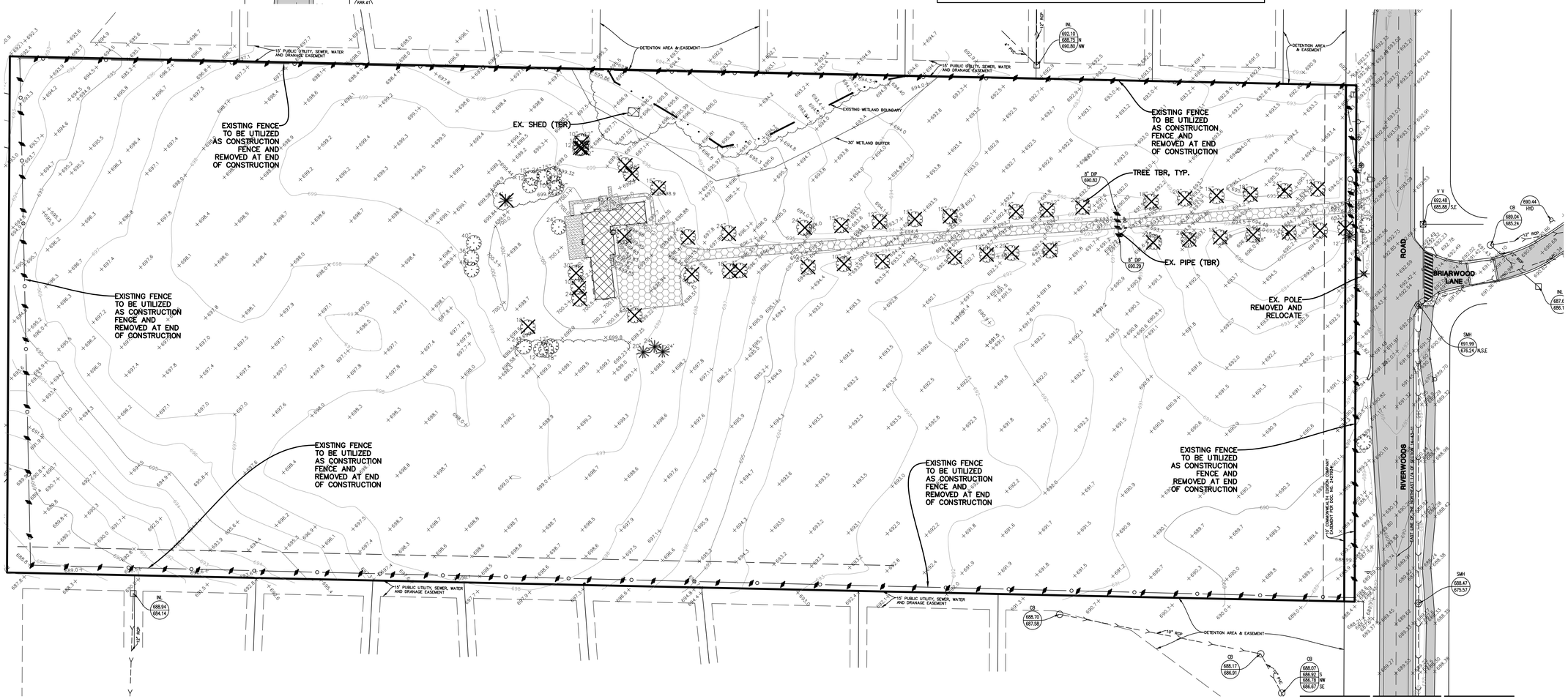

MATCH LINE STA. 7+00
SEE ABOVE LEFT

Manhard CONSULTING LTD

900 Woodlands Parkway, Vernon Hills, IL 60061 ph 847.634.5550 fx 847.634.0089 manhard.com
Civil Engineers • Water Resource Engineers • Water & Wastewater Engineers
Construction Managers • Environmental Scientists • Landscape Architects • Planners

DATE	REVISIONS	DRAWN BY

MANORS OF WHYTEGATE
LINCOLNSHIRE, ILLINOIS
EXISTING CONDITIONS AND DEMOLITION PLAN

PROJ. MGR.:	JGC
PROJ. ASSOC.:	DEM3
DRAWN BY:	DEM3
DATE:	3-17-15
SCALE:	1"=50'

SHEET 2 OF 8

AGCLN3 #

© 2015 MANHARD CONSULTING, LTD. ALL RIGHTS RESERVED

April 10, 2015 – 08:58 Dwg Name: P:\AGCLN3\dwg\Eng\Preliminary\Demo.dwg Updated By: dmcintyre

Return to Agenda

08-20-14

LEGEND

- —S——S— TEMPORARY SILT FENCE (PERIMETER EROSION BARRIER)
- —SD——SD— TEMPORARY SILT DIKE
- EROSION CONTROL BLANKET (NORTH AMERICAN GREEN DS 75) (SEEDING PER LANDSCAPE PLAN)
- TEMPORARY GRAVEL CONSTRUCTION ENTRANCE
- TEMPORARY STORM STRUCTURE PROTECTION
- PAVEMENT DRAINAGE FLOW
- SWALE DRAINAGE FLOW
- LIMITS OF DISTURBANCE/CONSTRUCTION

SOIL PROTECTION CHART

STABILIZATION CHART	JAN	FEB	MAR	APR	MAY	JUN	JUL	AUG	SEP	OCT	NOV	DEC
PERMANENT SEEDINGS			A			*	*		*			
DORMANT SEEDINGS	B									B		
TEMPORARY SEEDINGS			C			D						
SODDING			E**									
MULCHING	F											

A – KENTUCKY BLUEGRASS 90 LBS./AC. MIXED WITH PERENNIAL RYEGRASS 30 LBS./AC.

B – KENTUCKY BLUEGRASS 135 LBS./AC. MIXED WITH PERENNIAL RYEGRASS 45 LBS./AC. 2 TONS STRAW MULCH PER ACRE

C – SPRING OATS 100 LBS./AC.

D – WHEAT OR CEREAL RYE

E – SOD (NURSERY GROWN KENTUCKY BLUEGRASS)

F – STRAW MULCH 2 TONS PER ACRE

* IRRIGATION NEEDED DURING JUNE, JULY AND SEPTEMBER

** IRRIGATION NEEDED FOR 2–3 WEEKS AFTER SODDING

NOTE: THIS CHART IS A GUIDE TO ASSISTS THE CONTRACTOR IN UNDERSTANDING OPTIONS FOR SOIL STABILIZATION. THE LANDSCAPE PLAN SHALL TAKE PRECEDENCE OVER THIS CHART. ANY CONFLICT SHALL BE DISCUSSED WITH THE LANDSCAPE ARCHITECT PRIOR TO THE START OF CONSTRUCTION.

08-20-14

CONSTRUCTION SEQUENCE:

1. INSTALL SILT FENCE AT LOCATIONS AS INDICATED ON THE PLANS.
2. PROVIDE STABILIZED CONSTRUCTION ENTRANCE.
3. CONSTRUCT TEMPORARY SEDIMENT TRAPS AND/OR BASINS.
4. STRIP EXISTING TOPSOIL FROM PROPOSED STORMWATER MANAGEMENT AREAS AND STOCKPILE WHERE SHOWN ON PLANS.
5. PROVIDE SILT FENCE AROUND THE BASE OF THE STOCKPILES.
6. CONSTRUCT STORMWATER MANAGEMENT (DETENTION) FACILITIES TO SUB–GRADE AND INSTALL OUTLET PIPES.
7. COMPLETE TOPSOIL PLACEMENT AND PERMANENT SEEDING AND SODDING OF STORMWATER MANAGEMENT FACILITIES.
8. CUT AND FILL SITE TO PLAN SUB–GRADE.
9. CONSTRUCT UNDERGROUND IMPROVEMENTS, i.e. SANITARY SEWER WATERMAIN AND STORM SEWER**, ETC.
10. CONSTRUCT PAVEMENT IMPROVEMENTS PER PLAN.
11. COMPLETE CONSTRUCTION OF SITE WITH PERMANENT STABILIZATION.
12. REMOVE TEMPORARY EROSION AND SEDIMENT CONTROL MEASURES.

** INSTALL INLET PROTECTION AROUND DRAINAGE STRUCTURES AS CONSTRUCTED.

N

GRAPHIC SCALE

50 0 25 100 200

SCALE: 1"=50'

"THESE EROSION CONTROL PLANS ARE A PORTION OF THE ILLINOIS ENVIRONMENTAL PROTECTION AGENCY (IEPA) TOTAL REQUIREMENTS FOR A COMPLETE STORMWATER POLLUTION PREVENTION PLAN (SWPPP) AS REQUIRED BY THE GENERAL NPDES PERMIT NO. ILR10. CLIENT AND/OR CONTRACTOR WILL BE RESPONSIBLE FOR COMPLIANCE WITH ALL REQUIREMENTS OF THE GENERAL NPDES PERMIT AND COMPILATION OF THE COMPLETE SWPPP."

SOIL EROSION AND SEDIMENTATION CONTROL GENERAL NOTES:

1. ALL VEGETATIVE AND STRUCTURAL EROSION CONTROL PRACTICES SHALL BE CONSTRUCTED AND MAINTAINED IN ACCORDANCE WITH THE MINIMUM STANDARDS AND SPECIFICATIONS OF THE "ILLINOIS URBAN MANUAL".
2. MAINTENANCE AND REPLACEMENT OF EROSION CONTROL ITEMS, WHEN DIRECTED BY THE OWNER, SHALL BE CONSIDERED AS INCIDENTAL TO THE CONTRACT.
3. THE CONTRACTOR SHALL INSPECT ALL EROSION CONTROL MEASURES AT LEAST ONCE EVERY SEVEN (7) CALENDAR DAYS AND WITHIN 24 HOURS OF THE END OF A STORM THAT IS 0.5 INCHES OR GREATER OR EQUIVALENT SNOWFALL. ANY NECESSARY REPAIRS OR CLEANUP TO MAINTAIN THE EFFECTIVENESS OF SAID MEASURES SHALL BE MADE IMMEDIATELY.
4. INSTALL ALL PERIMETER SILT FENCING PRIOR TO ANY CLEARING OR GRADING. ONSITE SEDIMENT CONTROL MEASURES AS SHOWN AND SPECIFIED BY THIS EROSION AND SEDIMENTATION CONTROL PLAN SHALL BE CONSTRUCTED AND FUNCTIONAL PRIOR TO INITIATING CLEARING, GRADING, STRIPPING, EXCAVATION OR FILLING ACTIVITIES ON THE SITE.
5. STORM WATERS FALLING ON THE ENTIRE SITE SHALL BE DIVERTED INTO THE DETENTION BASIN, PRIOR TO BEGINNING MASS EXCAVATION, THE CONTRACTOR SHALL CONSTRUCT DITCHES, SWALES, SEDIMENTATION TRAPS AND SILTATION CONTROL MEASURES AS REQUIRED TO INTERCEPT SURFACE WATERS BEFORE THEY FLOW ONTO ADJACENT PROPERTY AND CONVEY THEM TO THE DETENTION BASIN.
6. DISTURBED AREA SHALL BE STABILIZED BY SEEDING AT A MINIMUM, WITHIN SEVEN (7) DAYS OF COMPLETION OF DISTURBANCE UNLESS THE AREA WILL BE DISTURBED WITHIN FOURTEEN (14) DAYS AND GRASS SOWN AS NECESSARY TO RE– ESTABLISH VEGETATION FOR CONTROL OF SILTATION AND SOIL EROSION.
7. TEMPORARY SEED MIXTURE SHALL BE APPLIED AT 64 LBS/ACRE.
8. INLET PROTECTION SHALL BE INSTALLED UNDER THE GRATING OF EACH DRAINAGE STRUCTURE.
9. TOPSOIL STOCKPILES SHALL BE SEEDED WITHIN SEVEN (7) CALENDAR DAYS OF COMPLETION FOR EROSION CONTROL UNLESS THEY WILL BE DISTURBED WITHIN FOURTEEN (14) CALENDAR DAYS. ALL SOIL STORAGE PILES SHALL BE PROTECTED FROM EROSION WITH SILT FENCE ON THE DOWN SLOPE SIDE OF THE PILES.
10. DURING DEWATERING OPERATIONS, WATER WILL BE PUMPED INTO SEDIMENT BASINS OR SILT TRAPS. DEWATERING DIRECTLY INTO FIELD TILES OR STORMWATER STRUCTURES IS PROHIBITED.
11. WATER PUMPED DURING CONSTRUCTION OPERATION SHALL BE FILTERED.
12. DUST CONTROL SHALL BE PERFORMED ON A DAILY BASIS USING WATER DISPERSED FROM A TRUCK MOUNTED TANK WITH STANDARD DISCHARGE HEADER TO PROVIDE A UNIFORM RATE OF APPLICATION.
13. TEMPORARY GRAVEL CONSTRUCTION ENTRANCES SHALL BE MAINTAINED, ADJUSTED OR RELOCATED AS NECESSARY TO PREVENT SEDIMENT FROM BEING TRACKED ONTO PUBLIC ROADWAYS. ANY SEDIMENT REACHING A PUBLIC ROAD SHALL BE REMOVED BY SHOVELING OR STREET CLEANING BEFORE THE END OF EACH WORKING DAY.
14. ANY LOOSE MATERIAL THAT IS DEPOSITED IN THE FLOW LINE OF ANY GUTTER OR DRAINAGE STRUCTURE DURING CONSTRUCTION OPERATIONS SHALL BE REMOVED AT THE CLOSE OF EACH WORKING DAY.
15. OVERLAND FLOW SHALL BE DIRECTED TO THE DETENTION BASIN PRIOR TO LEAVING THE SITE.
16. THE EROSION CONTROL MEASURES INDICATED ON THE PLANS ARE THE MINIMUM REQUIREMENTS. ADDITIONAL MEASURES MAY BE REQUIRED, AS DIRECTED BY THE CLIENT OR OTHER JURISDICTIONAL GOVERNMENTAL ENTITIES.
17. ALL EROSION AND SEDIMENTATION CONTROL MEASURES SHALL BE REMOVED AND DISPOSED OF IN ACCORDANCE WITH ALL JURISDICTIONAL GOVERNMENTAL AGENCY REQUIREMENTS WITHIN 30 DAYS OF FINAL STABILIZATION.

DATE	REVISIONS	DRAWN BY

Manhard CONSULTING LTD
900 Woodlands Parkway, Vernon Hills, IL 60061 ph847.634.5550 fx847.634.0095 manhard.com
Civil Engineers • Surveyors • Water Resource Engineers • Water & Wastewater Engineers
Construction Managers • Environmental Scientists • Landscape Architects • Planners

MANORS OF WHYTEGATE
LINCOLNSHIRE, ILLINOIS
SOIL AND SEDIMENT EROSION CONTROL PLAN

PROJ. MGR.:	JGC
PROJ. ASSOC.:	DEM3
DRAWN BY:	DEM3
DATE:	3–17–15
SCALE:	1"=50'

SHEET 3 OF 8

AGCLN3 #

© 2015 MANHARD CONSULTING, LTD. ALL RIGHTS RESERVED

April 10, 2015 – 08:59 Dwg Name: P:\Vision3\Data\Eng\Preliminary\SESCP.dwg Updated By: dmcintyre(ill)

Return to Agenda

GRADING NOTES:

1. MEET EXISTING GRADE AT PROPERTY LIMITS UNLESS NOTED OTHERWISE.
2. CONTRACTOR SHALL REFER TO THE SOIL EROSION AND SEDIMENT CONTROL PLAN AND DETAILS FOR CONSTRUCTION SCHEDULING AND EROSION CONTROL MEASURES TO BE INSTALLED PRIOR TO BEGINNING GRADING OPERATIONS.
3. THE CONTRACTOR SHALL CONTACT J.U.L.I.E. (1-800-892-0123) PRIOR TO ANY WORK TO LOCATE UTILITIES AND SHALL CONTACT THE OWNER SHOULD UTILITIES APPEAR TO BE IN CONFLICT WITH THE PROPOSED IMPROVEMENT.
4. THE CONTRACTOR IS SPECIFICALLY CAUTIONED THAT THE LOCATION AND/OR ELEVATION OF EXISTING UTILITIES AS SHOWN ON THESE PLANS IS BASED ON RECORDS OF THE VARIOUS UTILITY COMPANIES, AND WHERE POSSIBLE, MEASUREMENTS TAKEN IN THE FIELD. THE INFORMATION IS NOT TO BE RELIED ON AS BEING EXACT OR COMPLETE. THE CONTRACTOR MUST CALL THE APPROPRIATE UTILITY COMPANIES AT LEAST 72 HOURS BEFORE ANY EXCAVATION TO REQUEST EXACT FIELD LOCATION OF UTILITIES. IT SHALL BE THE RESPONSIBILITY OF THE CONTRACTOR TO RELOCATE ALL EXISTING UTILITIES WHICH CONFLICT WITH THE PROPOSED IMPROVEMENTS SHOWN ON THE PLANS.
5. IF ANY EXISTING STRUCTURES TO REMAIN ARE DAMAGED DURING CONSTRUCTION IT SHALL BE THE CONTRACTORS RESPONSIBILITY TO REPAIR AND/OR REPLACE THE EXISTING STRUCTURE AS NECESSARY TO RETURN IT TO EXISTING CONDITION OR BETTER.
6. ALL UNSURFACED AREAS DISTURBED BY GRADING OPERATION SHALL RECEIVE 6 INCHES OF TOPSOIL. CONTRACTOR SHALL APPLY STABILIZATION FABRIC TO ALL SLOPES 3H:1V OR STEEPER. CONTRACTOR SHALL STABILIZE DISTURBED AREAS IN ACCORDANCE WITH GOVERNING SPECIFICATIONS UNTIL A HEALTHY STAND OF VEGETATION IS OBTAINED.
10. EXISTING TOPOGRAPHY SHOWN REPRESENTS SITE CONDITIONS AS PREPARED BY MANHARD CONSULTING, LTD. ON FEBRUARY 4, 2014. CONTRACTOR SHALL FIELD CHECK EXISTING ELEVATIONS AND CONDITIONS PRIOR TO CONSTRUCTION AND NOTIFY ARCHITECT AND ENGINEER OF ANY DISCREPANCIES PRIOR TO STARTING CONSTRUCTION. IF THE CONTRACTOR DOES NOT ACCEPT EXISTING TOPOGRAPHY AS SHOWN ON THE PLANS, WITHOUT EXCEPTION, THEN THE CONTRACTOR SHALL SUPPLY, AT THEIR EXPENSE, A TOPOGRAPHIC SURVEY BY A REGISTERED LAND SURVEYOR TO THE OWNER FOR REVIEW.

N

GRAPHIC SCALE

50 0 25 100 200

SCALE: 1"=50'

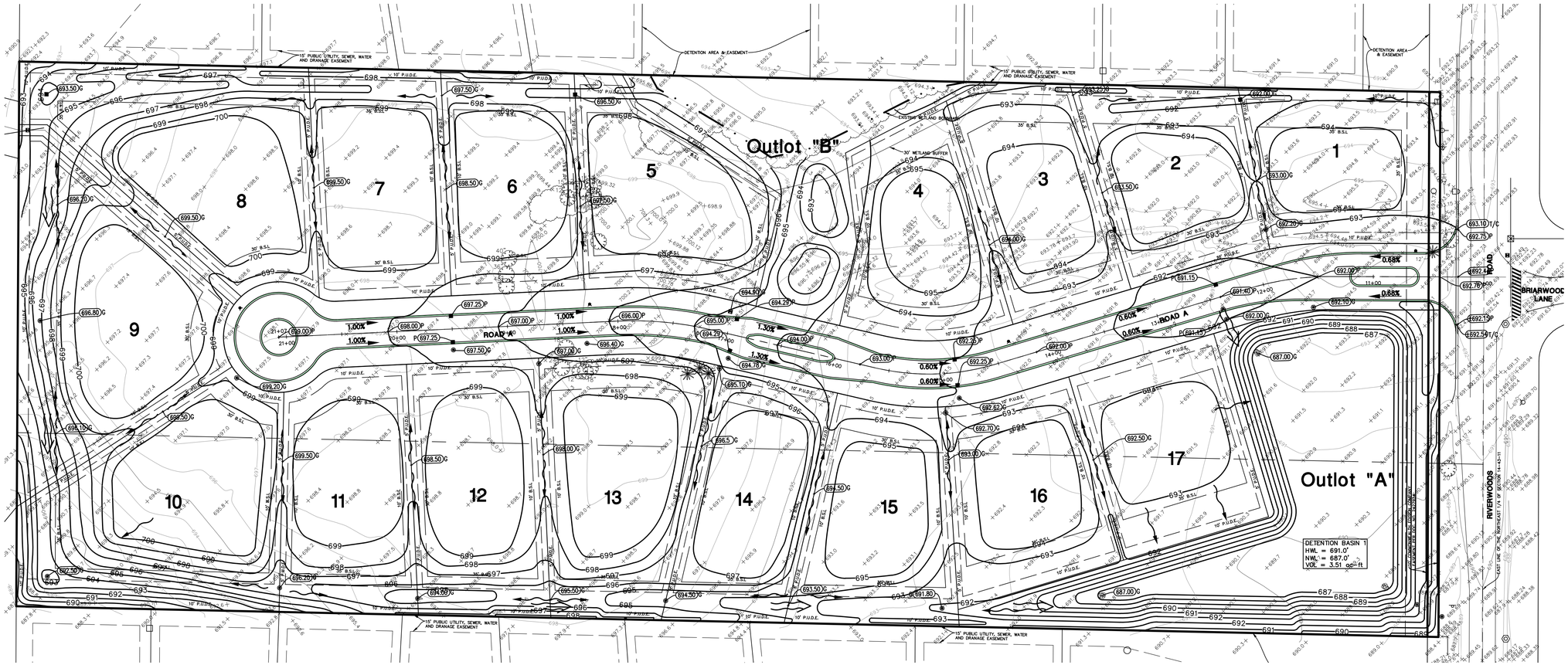

DATE	REVISIONS	DRAWN BY

Manhard CONSULTING LTD
900 Woodlands Parkway, Vernon Hills, IL 60061 ph:847.634.5550 fx:847.634.0095 manhard.com
Civil Engineers • Surveyors • Water Resource Engineers • Water & Wastewater Engineers
Construction Managers • Environmental Scientists • Landscape Architects • Planners

MANORS OF WHYTEGATE
LINCOLNSHIRE, ILLINOIS
GRADING PLAN

PROJ. MGR.: JGC
PROJ. ASSOC.: DEM3
DRAWN BY: DEM3
DATE: 3-17-15
SCALE: 1"=50'

SHEET 4 OF 8

AGCLN3 #

© 2015 MANHARD CONSULTING, LTD. ALL RIGHTS RESERVED

April 10, 2015 – 09:00 Dwg Name: P:\Agcln3\Dwg\Eng\Preliminary\Grading.dwg Updated By: dmcintosh

Return to Agenda

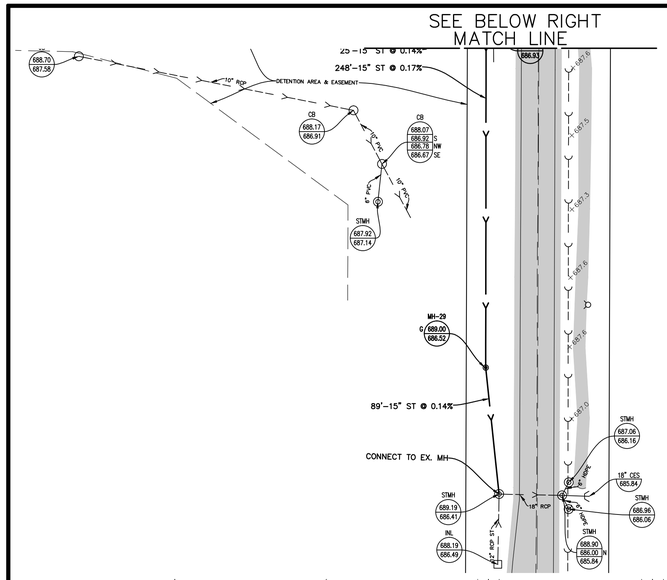

08-01-18

UTILITY NOTES:

1. ALL UTILITY DIMENSIONS ARE TO CENTER OF PIPE OR CENTER OF STRUCTURE UNLESS OTHERWISE NOTED.
2. BUILDING DIMENSIONS AND ADJACENT UTILITY LAYOUT HAVE BEEN PREPARED BASED UPON ARCHITECTURAL INFORMATION CURRENT AT THE DATE OF THIS DRAWING. SUBSEQUENT ARCHITECTURAL CHANGES MAY EXIST. THEREFORE CONTRACTOR SHALL REFER TO ARCHITECTURAL PLANS FOR PRECISE BUILDING DIMENSIONS AND EXACT UTILITY ENTRANCE LOCATIONS AND NOTIFY THE ARCHITECT AND ENGINEER OF ANY DISCREPANCIES PRIOR TO CONSTRUCTION.
3. THE CONTRACTOR SHALL CONTACT J.U.L.I.E. (1-800-892-0123) PRIOR TO ANY WORK TO LOCATE UTILITIES AND SHALL CONTACT THE OWNER SHOULD UTILITIES APPEAR TO BE IN CONFLICT WITH THE PROPOSED IMPROVEMENT.
4. ROUTING OF GAS, ELECTRIC AND TELEPHONE SERVICES IF SHOWN ARE APPROXIMATE ONLY AND SUBJECT TO CHANGE BASED UPON FINAL REVIEW AND APPROVAL BY RESPECTIVE UTILITY COMPANIES AND OWNER. CONTRACTOR SHALL CONTACT EACH UTILITY COMPANY AND COORDINATE FINAL LOCATIONS FOR ALL UTILITY SERVICES PRIOR TO START OF CONSTRUCTION.
5. CONTRACTOR SHALL EXCAVATE AND VERIFY ALL EXISTING SEWER OR WATER MAIN LOCATIONS, SIZES, CONDITIONS & ELEVATIONS AT PROPOSED POINTS OF CONNECTION AND CROSSINGS PRIOR TO ANY UNDERGROUND CONSTRUCTION AND NOTIFY THE OWNER OF ANY DISCREPANCIES OR CONFLICTS.
6. PRIOR TO CONSTRUCTION, CONTRACTOR SHALL POTHOLE ALL PROPOSED UTILITY CROSSINGS AND VERIFY PIPE SIZE AND ELEVATION. CONTRACTOR SHALL PROVIDE ENGINEER WITH FINDINGS.

UTILITY NOTES:

7. LIGHTING AND UNDERGROUND CABLE IF SHOWN ON PLANS ARE FOR APPROXIMATE LOCATION ONLY. REFER TO ARCHITECTURAL PLANS FOR SPECIFICATIONS AND DETAILS.
8. THE CONTRACTOR SHALL ADJUST RIM ELEVATIONS OF ALL EXISTING STRUCTURES TO PROPOSED FINISH GRADES.
9. CONTRACTOR TO VERIFY LOCATION, SIZES, AND ELEVATION OF ALL BUILDING SERVICE LOCATIONS WITH ARCHITECTURAL PLANS.
10. AT LOCATIONS WHERE WATER MAIN CROSSES BENEATH OR LESS THAN 18" ABOVE A SEWER, PROVIDE WATER MAIN PROTECTION PER STANDARD SPECIFICATIONS FOR SEWER AND WATER MAIN CONSTRUCTION IN ILLINOIS, LATEST EDITION.
11. ELEVATIONS GIVEN FOR STORM SEWER STRUCTURES LOCATED IN CURB LINE ARE PAVEMENT ELEVATIONS.
12. ALL WATER MAIN SHALL BE 5'-6" BELOW FINISHED GRADE TO TOP OF MAINS UNLESS NOTED OTHERWISE.
13. ALL EXISTING UTILITIES SHOWN ARE NOT TO BE INTERPRETED AS THE EXACT ELEVATION OR LOCATION, OR AS THE ONLY OBSTACLES THAT MAY OCCUR ON THE SITE. CONTRACTOR SHALL VERIFY EXISTING CONDITIONS AND PROCEED WITH CAUTION AROUND ANY ANTICIPATED FEATURES.
14. ALL SANITARY AND STORM SEWER LENGTHS SHOWN ARE CENTER OF MANHOLE TO CENTER OF MANHOLE OR STORM MANHOLE TO FES.
15. PROVIDE CONCRETE COLLAR FOR ALL MANHOLES & VALVE VAULTS IN PAVEMENT, NOT ADJACENT TO CURB. SEE CONCRETE COLLAR DETAIL ON DETAIL SHEET.

UTILITY NOTES:

16. CONTRACTOR SHALL CORE AND BOOT ALL PIPE ENTRANCES TO EXISTING SANITARY MANHOLES.
17. EXTERNAL CHIMNEY SEALS ARE REQUIRED ON PROPOSED AND ADJUSTED EXISTING SANITARY MANHOLES.
18. SOME EXISTING ITEMS TO BE REMOVED HAVE BEEN DELETED FROM THIS PLAN FOR CLARITY. SEE DEMOLITION PLAN FOR ITEMS DELETED.
19. ALL D.I. WATERMAIN FITTINGS SHALL BE WRAPPED.

N

GRAPHIC SCALE

50 0 25 100 200

SCALE: 1"=50'

UTILITY CROSSINGS

①	②	③
ST OVER WM	ST OVER WM	ST OVER WM
B/P ST = 690.8	B/P ST = 691.2	B/P ST = 687.7
T/P WM = 688.8	T/P WM = 689.2	T/P WM = 685.7

* WATER AND SEWER CROSSINGS SHALL MEET STATE EPA SEPARATION AND PIPE MATERIAL REQUIREMENTS. (SEE DETAIL SHEET)

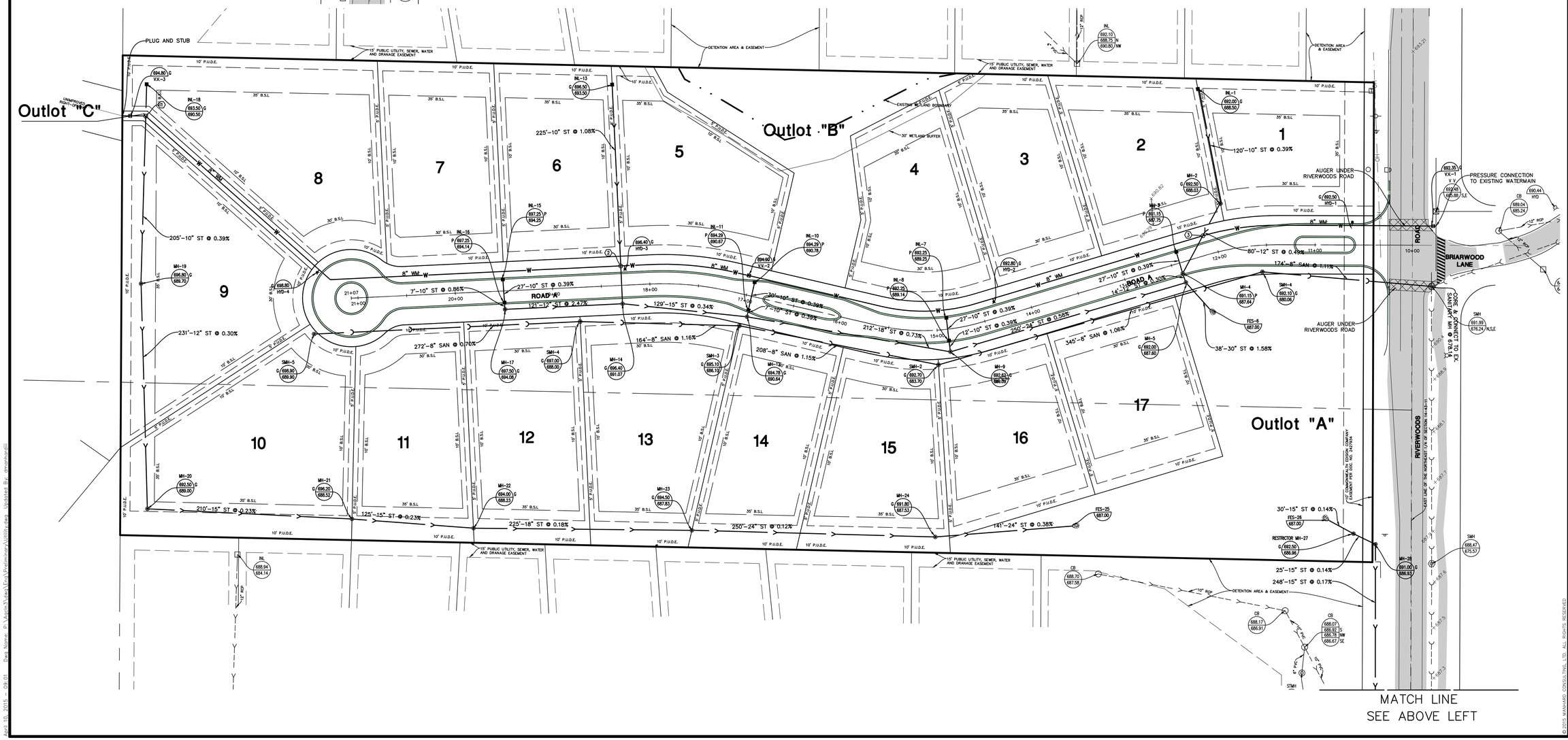

DATE	REVISIONS	DRAWN BY

Manhard CONSULTING LTD

900 Woodlands Parkway, Vernon Hills, IL 60061 ph 847.634.5550 fx 847.634.0066 manhard.com
Civil Engineers • Water Resource Engineers • Surveyors • Water & Wastewater Engineers • Planners
Construction Managers • Environmental Scientists • Landscape Architects • Planners

MANORS OF WHYTEGATE
LINCOLNSHIRE, ILLINOIS
UTILITY PLAN

PROJ. MGR.:	JGC
PROJ. ASSOC.:	DEM3
DRAWN BY:	DEM3
DATE:	3-17-15
SCALE:	1"=50'

SHEET 5 OF 8

AGLCN3 #

© 2015 MANHARD CONSULTING, LTD. ALL RIGHTS RESERVED

April 10, 2015 - 09:01 Dwg Name: P:\Aspin\Vlag\Eng\Preliminary\Utility.dwg Updated By: dmcintyre

Return to Agenda

CONCRETE FLARED END SECTION DETAIL

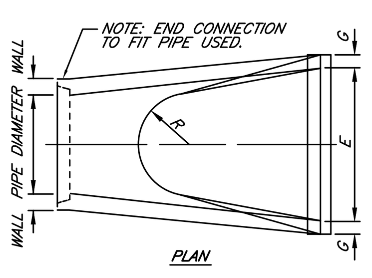

PIPE DIA.	APPROX. WT. (LBS.)	WALL	A	B	C	D	E	G	R	SLOPE	SET BACK
12"	530	2"	4"	2'-0"	4'-0⅞"	6'-0⅞"	2'-0"	2"	9"	3:1	0
15"	740	2¼"	6"	2'-3"	3'-10"	6'-1"	2'-6"	2¼"	11"	3:1	0
18"	990	2½"	9"	2'-3"	3'-10"	6'-1"	3'-0"	2½"	12"	3:1	0
21"	1280	2¾"	9"	2'-11"	3'-2"	6'-1"	3'-6"	2¾"	13"	3:1	0
24"	1520	3"	9½"	3'-7½"	2'-6"	6'-1½"	4'-0"	3"	14"	3:1	0
27"	1930	3¼"	10"	4'-0"	2'-1½"	6'-1½"	4'-6"	3¼"	14½"	3:1	0
30"	2190	3½"	1'-0"	4'-6"	1'-7¾"	6'-1¾"	5'-0"	3½"	15"	3:1	0
33"	3200	3¾"	1'-1½"	4'-10½"	3'-3¼"	8'-1¾"	5'-6"	3¾"	17½"	3:1	6
36"	4100	4"	1'-3"	5'-3"	2'-10¾"	8'-1¾"	6'-0"	4"	20"	3:1	7
42"	5380	4½"	1'-9"	5'-3"	2'-11"	8'-2"	6'-6"	4½"	22"	3:1	7
48"	6550	5"	2'-0"	6'-0"	2'-2"	8'-2"	7'-0"	5"	22"	3:1	10
54"	8240	5½"	2'-3"	5'-5"	2'-11"	8'-4"	7'-6"	5½"	24"	2.4:1	12
60"	8730	6"	2'-11"	5'-0"	3'-3"	8'-3"	8'-0"	5"	*	2:1	14
66"	10710	6½"	2'-6"	6'-0"	2'-3"	8'-3"	8'-6"	5½"	*	2:1	16
72"	12520	7"	3'-0"	6'-6"	1'-9"	8'-3"	9'-0"	6"	*	1.86:1	17
78"	14770	7½"	3'-0"	7'-6"	1'-9"	9'-3"	9'-6"	6½"	*	1.82:1	18
84"	18160	8"	3'-0"	7'-6½"	1'-9"	9'-3½"	10'-0"	6½"	*	1.5:1	20

* RADIUS AS FURNISHED BY MANUFACTURER

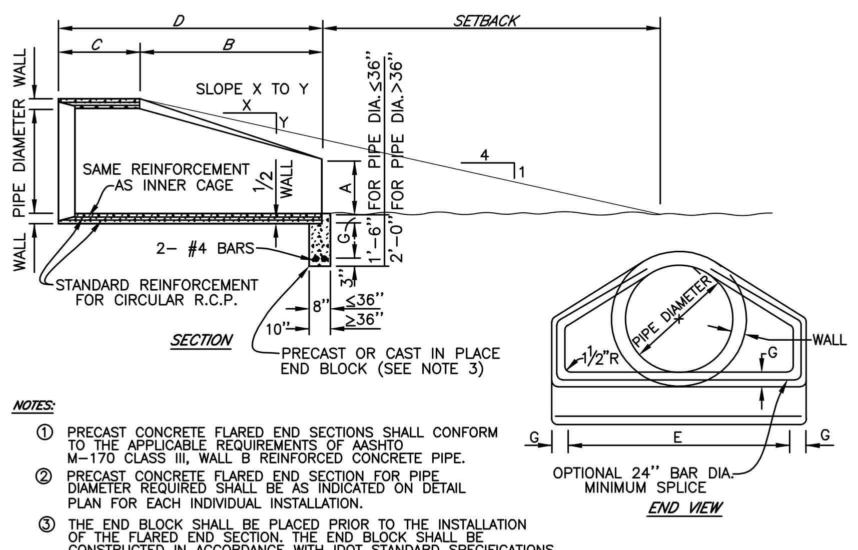

NOTES:

1. PRECAST CONCRETE FLARED END SECTIONS SHALL CONFORM TO THE APPLICABLE REQUIREMENTS OF AASHTO M-170 CLASS III, WALL B REINFORCED CONCRETE PIPE.
2. PRECAST CONCRETE FLARED END SECTION FOR PIPE DIAMETER REQUIRED SHALL BE AS INDICATED ON DETAIL PLAN FOR EACH INDIVIDUAL INSTALLATION.
3. THE END BLOCK SHALL BE PLACED PRIOR TO THE INSTALLATION OF THE FLARED END SECTION. THE END BLOCK SHALL BE CONSTRUCTED IN ACCORDANCE WITH IDOT STANDARD SPECIFICATIONS
4. ALL FLARED END SECTIONS SHALL HAVE GRATINGS AS PER IDOT STANDARD.
5. PROVIDE CLAY DAM UNDER COLLAR AND AROUND UPSTREAM END OF FES AND FIRST PIPE THE FULL WIDTH OF TRENCH AND 10 FEET LONG AT LOCATIONS WHERE THEY DISCHARGE INTO A DETENTION BASIN.
6. PROVIDE SETBACK FROM NORMAL WATER LEVEL OR TOE OF SIDE SLOPE ON DRY BASINS, STREAMS OR CHANNELS FOR PIPE 33" AND LARGER.

CONCRETE FLARED END SECTION DETAIL

08-01-14 S-ST-FES

GRATING FOR 24",30",36" CONCRETE FLARED END SECTION

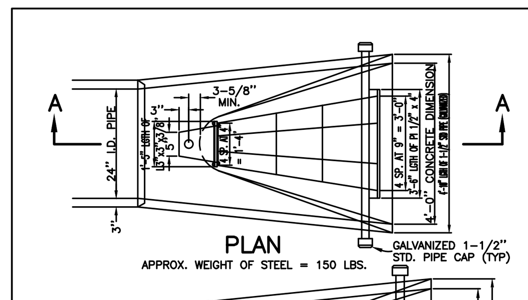

GENERAL NOTES

GRATING DETAIL SHOWN ARE INTENDED FOR USE WITH PARTICULAR SIZES OF PRECAST REINFORCED CONCRETE FLARED END SECTIONS AS SHOWN ON STANDARD 542311.

STRUCTURAL STEEL SHAPES AND PLATES SHALL BE IN ACCORDANCE WITH IDOT STANDARD SPECIFICATIONS.

GALVANIZED STEEL PIPE SHALL BE IN ACCORDANCE WITH THE IDOT STANDARD SPECIFICATIONS.

BOLTS, NUTS AND WASHERS SHALL BE IN ACCORDANCE WITH IDOT STANDARD SPECIFICATIONS.

ALL FABRICATION SHALL BE COMPLETED AND READY FOR ASSEMBLY BEFORE GALVANIZING.

THE CORED HOLES IN THE PRECAST CONCRETE FLARED END SECTIONS SHALL BE TO THE DIAMETERS NOTED. IF CONE-OUT ON THE OTHER END OF THE HOLE OCCURS, THE HOLE SHALL BE FILLED WITH GROUT TO CORRECT DIAMETER OF THE HOLE.

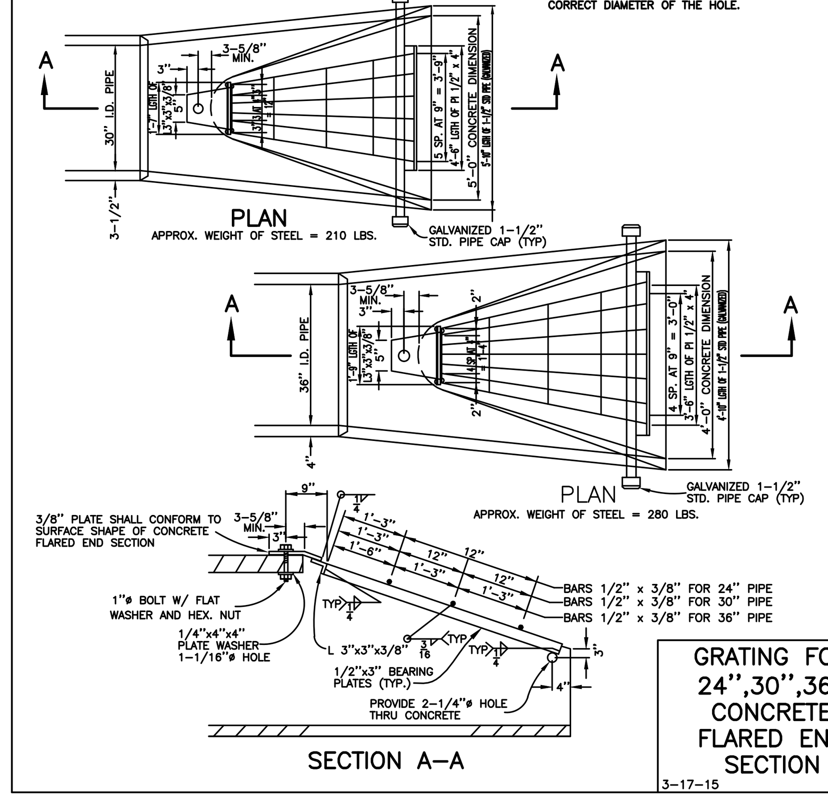

GRATING FOR 24",30",36" CONCRETE FLARED END SECTION

3-17-15 AGCLN3

GRATING FOR 12",15",18",21" CONCRETE FLARED END SECTION

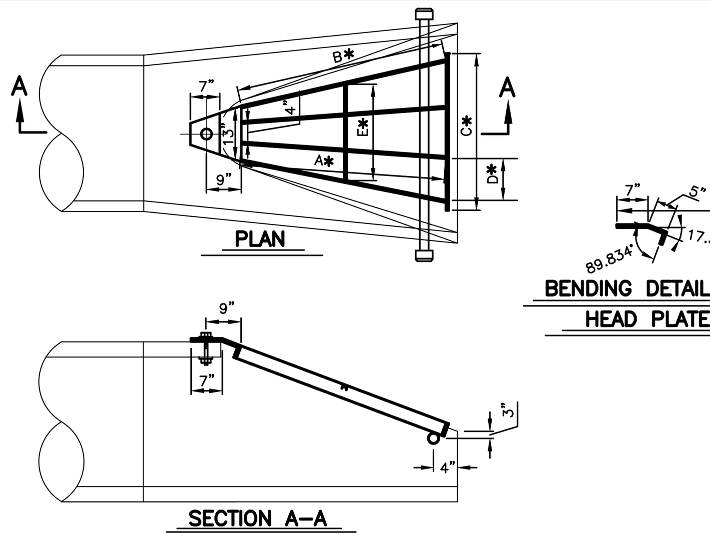

GENERAL NOTES

GRATING DETAIL SHOWN ARE INTENDED FOR USE WITH PARTICULAR SIZES OF PRECAST REINFORCED CONCRETE FLARED END SECTIONS AS SHOWN ON IDOT STANDARD 542301

STRUCTURAL STEEL SHAPES AND PLATES SHALL BE IN ACCORDANCE WITH THE STANDARD SPECIFICATIONS GALVANIZED STEEL PIPE SHALL BE IN ACCORDANCE WITH THE IDOT STANDARD SPECIFICATIONS.

BOLTS, NUTS AND WASHERS SHALL BE IN ACCORDANCE WITH THE IDOT STANDARD SPECIFICATIONS.

ALL FABRICATION SHALL BE COMPLETED AND READY FOR ASSENBLY BEFORE GALVANIZING.

THE CORED HOLES IN THE PRECAST CONCRETE FLARED END SECTIONS SHALL BE TO THE DIAMETERS NOTED. IF CONE-OUT ON THE OTHER END OF THE HOLE OCCURS, THE HOLE SHALL BE FILLED WITH GROUT TO

BILL OF MATERIAL : FES GRATES		12"	15"	18"	21"
1 13" HEAD PLATE					
2 ⅜" x 3" x *" HR. FLAT	(A)	19¼"	22¾"	25"	31¼"
2 ⅜" x 3" x *" HR. FLAT	(B)	19⅜"	23¼"	26⅛"	32"
1 ⅜" x 4" x *" HR. FLAT	(C)	20"	26"	32"	36"
1 ⅜" x ½" x *" HR. FLAT	(E)	15¼"	17¾"	19¾"	19¾"
2 1½" GALVANIZED CAPS					
1 1½" x *" GALVANIZED PIPE		30"	39"	45"	50"
1 1"-8x4 ½" GALVANIZED BOLT					
1 1"-8 GALVANIZED HEX NUT					
1 ¼"x4"x4" HR. PLATE WITH ⅛" HOLE					
*" O.C.	(D)	6"	8"	9"	9⅜"

GRATING FOR 12",15",18",21" CONCRETE FLARED END SECTION

3-17-15 AGCLN3

STANDARD SPECIFICATIONS FOR WATER AND SEWER CONSTRUCTION IN ILLINOIS, LATEST EDITION.

41-2.01 PROTECTION OF WATER MAIN AND WATER SERVICE LINES

41-2.01A GENERAL

Water mains and water service lines shall be protected from sanitary sewers, storm sewers, combined sewers, house sewer service connections and drains as follows:

41-2.01B HORIZONTAL SEPARATION – WATER MAINS AND SEWERS

(1.) Water mains shall be located at least ten (10) feet (3.1 m) horizontally from any existing or proposed drain, storm sewer, sanitary sewer, combined sewer or sewer service connection.

(2.) Water mains may be located closer than ten (10) feet (3.1 m) to a sewer line when:

(a) local conditions prevent a lateral separation of ten (10) feet (3.1 m); and

(b) the water main invert is at least eighteen (18) inches (460 mm) above the crown of the sewer; and

(c) the water main is either in a separate trench or in the same trench on an undisturbed earth shelf located to one side of the sewer.

(3.) When it is impossible to meet (1) or (2) above, both the water main and drain or sewer shall be constructed of slip-on or mechanical joint cast or ductile iron pipe, prestressed concrete pipe, or PVC pipe equivalent to water main standards of construction. The drain or sewer shall be pressure tested to the maximum expected surcharge head before backfilling. See Standard Drawing No. 18.

WATER AND SEWER SEPARATION REQUIREMENTS (HORIZONTAL SEPARATION)

08-01-14 S-WM-SEP-1

STANDARD SPECIFICATIONS FOR WATER AND SEWER CONSTRUCTION IN ILLINOIS, LATEST EDITION.

41-2.01C VERTICAL SEPARATION – WATER MAINS AND SEWERS

(1.) A water main shall be separated from a sewer so that its invert is a minimum of eighteen (18) inches (460mm) above the crown of the drain or sewer whenever water mains cross storm sewers, sanitary sewers or sewer service connections. The vertical separation shall be maintained for that portion of the water main located within ten (10) feet (3.1m) horizontally of any sewer or drain crossed. A length of water main pipe shall be centered over the sewer to be crossed with joints equidistant from the sewer or drain.

(2.) Both the water main and sewer shall be constructed of slip-on or mechanical joint cast or ductile iron pipe, prestressed concrete pipe, or PVC pipe equivalent to water main standards of construction when:

(a) it is impossible to obtain the proper vertical separation as described in (1) above; or

(b) the water main passes under a sewer or drain.

NOTES:

(1) CASING OF EITHER THE WATER MAIN OR SEWER PIPE IS ACCEPTABLE IN LIEU OF PLACING THE SEWER IN WATER MAIN EQUIVALENT PIPE.

(2) THE STORM SEWER CAN BE CONSTRUCTED WITH REINFORCED CONCRETE PIPE USING FLEXIBLE GASKETS JOINTS, (ASTM C361 C443) INSTEAD OF CONSTRUCTING THE STORM SEWER WITH WATER MAIN EQUIVALENT PIPE OR CASING PIPE.

(3.) A vertical separation of eighteen (18) inches (460 mm) between the invert of the sewer or drain and the crown of the water main shall be maintained where a water main crosses under a sewer. Support the sewer or drain lines to prevent settling and breaking the main, as shown on the Plans or as approved by the ENGINEER.

(4.) Construction shall extend on each side of the crossing until the perpendicular distance from the water main to the sewer or drain line is at least ten (10) feet (3.1 m) See Standard Drawings No. 19-23.

WATER AND SEWER SEPARATION REQUIREMENTS (VERTICAL SEPARATION)

08-01-14 S-WM-SEP-2

FIRE HYDRANT DETAIL

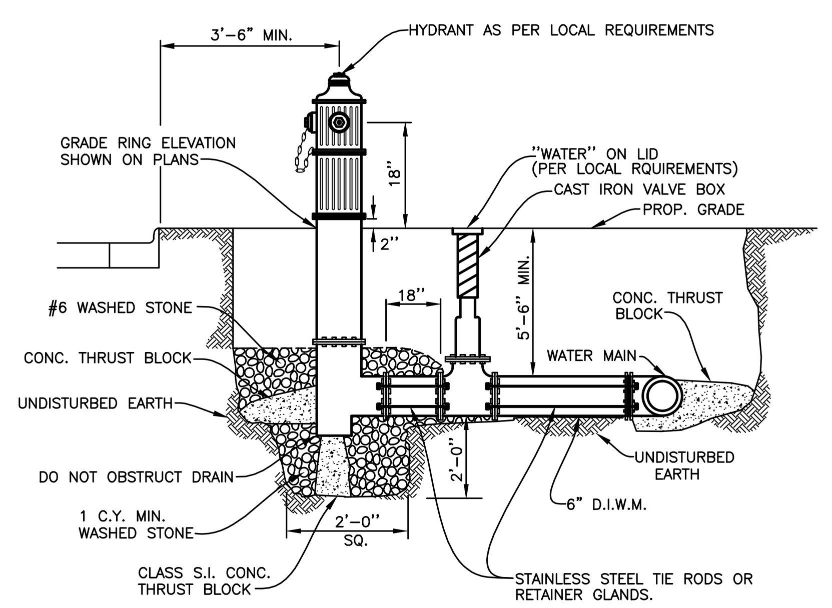

NOTES:

1. ALL HYDRANTS TO FACE STREET AND LOCATED MINIMUM 3'-6" FROM BACK OF CURB TO THE CENTERLINE OF HYDRANT.
2. HYDRANTS TO BE PAINTED IN ACCORDANCE WITH LOCAL REQUIREMENTS.

FIRE HYDRANT DETAIL

08-01-14 S-WM-HYD

RIP RAP DETAIL (DISCHARGE TO LAKE)

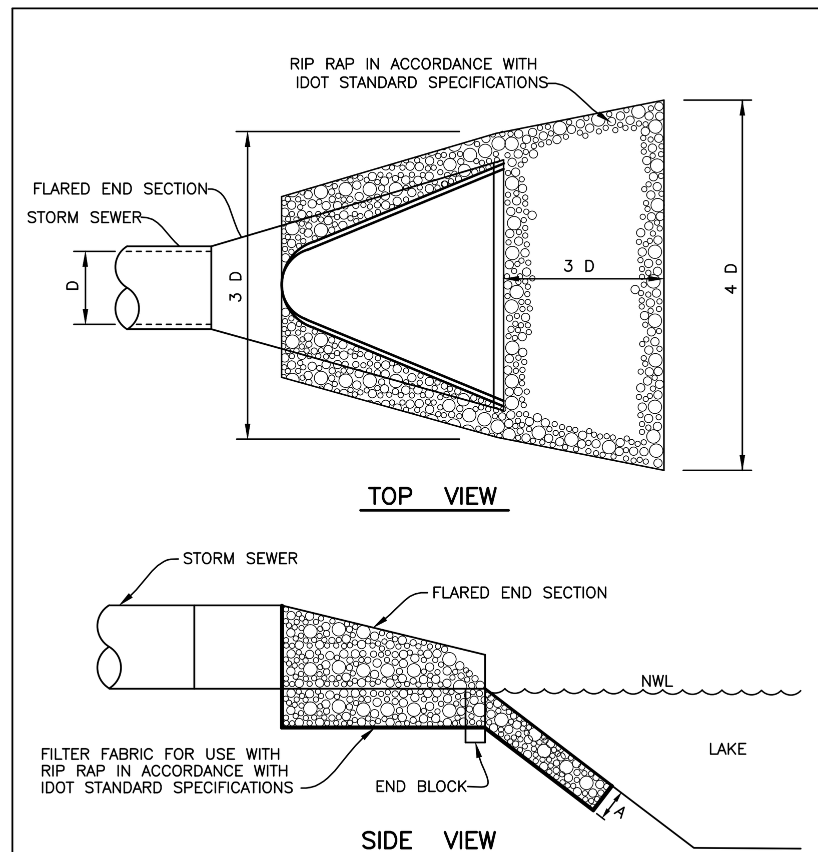

RIP RAP DETAIL (DISCHARGE TO LAKE)

08-01-14 S-ST-RIP-LK1

RIP-RAP

PIPE DIAMETER (IN.) D	STONE RIP-RAP							BEDDING
	QUALITY DESIGNATION	GRADATION NUMBER RR	MINIMUM THICKNESS (IN.) A	MINIMUM LENGTH (FT.) 4D	WEIGHT RANGE (#)	WEIGHT AVERAGE (#)	SIZE AVERAGE (IN.)	MINIMUM THICKNESS (IN.)
12"	B	3	8"	4'	1-50	10	4.5"	N/A
15"	B	3	8"	5	1-50	10	4.5"	N/A
18"	B	4	16"	6'	1-150	40	7"	6"
21"	B	4	16"	7'	1-150	40	7"	6"
24"	B	4	16"	8'	1-150	40	7"	6"
27"	B	4	16"	9'	1-150	40	7"	6"
30"	B	4	16"	10'	1-150	40	7"	6"
36"	B	5	22"	12'	3-400	90	10"	8"
42"	B	5	22"	14'	3-400	90	10"	8"
48"	B	6	26"	16'	6-600	170	12"	10"
54"	B	6	26"	18'	6-600	170	12"	10"
60"	B	6	26"	20'	6-600	170	12"	10"
72"	B	6	26"	24'	6-600	170	12"	10"

NOTE:

1. FOR PIPE LARGER THAN 72" A SPECIAL DESIGN OF RIP-RAP OR APRON IS REQUIRED.
2. REFER TO I.D.O.T. SPECIFICATIONS AND STANDARDS FOR BEDDING GRADTION.

STONE RIP RAP DETAIL

08-01-14 S-ST-RIP2

STORM MANHOLE DETAIL

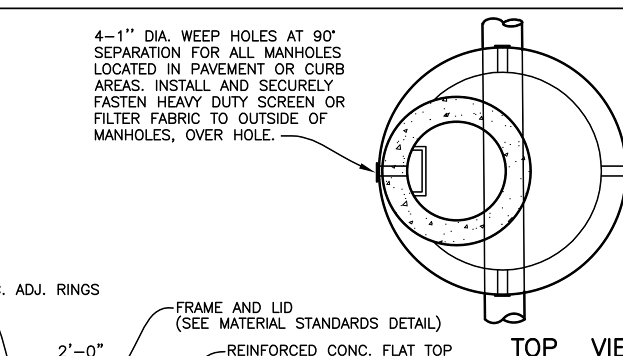

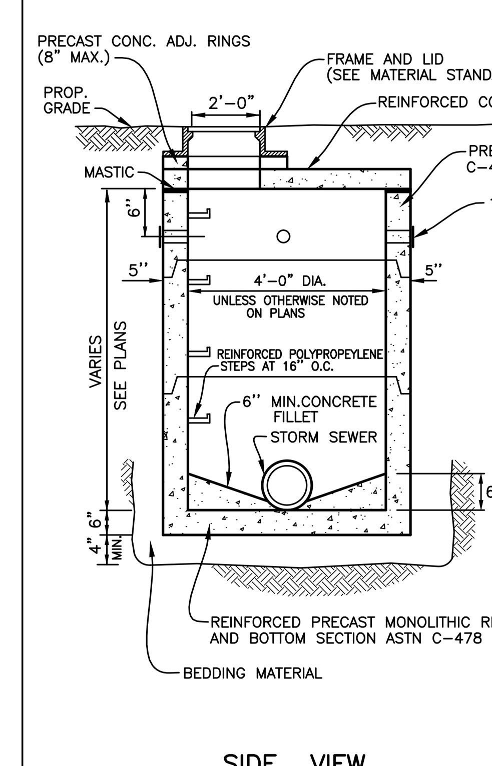

NOTES:
1. INSTALL MINIMUM 4" OF BEDDING MATERIAL UNDER STRUCTURE BOTTOM SECTION & FILL ENTIRE EXCAVATION ALL AROUND STRUCTURE UP TO C.L. OF OF PIPE WITH BEDDING AND HAUNCHING MATERIAL.
2. PIPE OPENINGS SHALL BE CAST INTO WALL.
3. STRUCTURE FRAME, ADJUSTING RINGS, & ALL CONCRETE SECTIONS SHALL BE SET ON AND SEALED WITH BITUMINOUS MASTIC JOINT MATERIAL & MORTARED ON INSIDE IF STRUCTURE LIES IN PAVEMENT.
4. FILL LUG HOLES WITH BITUMINOUS JOINING COMPOUND.
5. USE PRECAST OFFSET CONE INSTEAD OF FLAT TOP FOR MANHOLES GREATER THAN 6' DEEP.
6. CURB & GUTTER TYPE FRAME AND GRATES OF MANHOLES IN PARKING LOT CORNERS SHALL BE LOCATED 3'-0" FROM THE FACE OF ANY ADJACENT CURB TO CENTERLINE OF FRAME & LID.

STORM MANHOLE DETAIL

08-01-14 S-ST-MH

INLET DETAIL

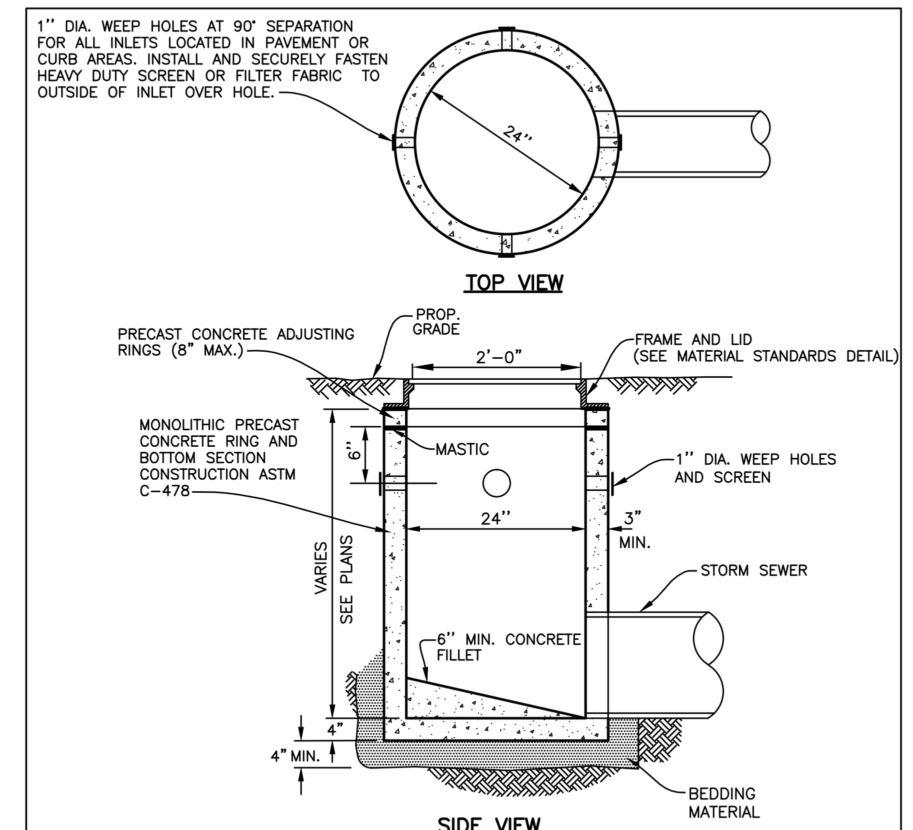

NOTES:
1. INSTALL MINIMUM 4" OF BEDDING MATERIAL UNDER STRUCTURE BOTTOM SECTION & FILL ENTIRE EXCAVATION ALL AROUND STRUCTURE UP TO C.L. OF PIPE WITH BEDDING AND HAUNCHING MATERIAL.
2. PIPE OPENINGS SHALL BE CAST IN TO WALL.
3. STRUCTURE FRAME, ADJUSTING RINGS, AND ALL CONCRETE SECTIONS SHALL BE SET ON AND SEALED WITH BITUMINOUS MASTIC JOINT MATERIAL AND MORTARED ON INSIDE IF STRUCTURE LIES IN PAVEMENT.
4. FILL LUG HOLES WITH BITUMINOUS JOINING COMPOUND.
5. CURB & GUTTER TYPE FRAME AND GRATES OF INLETS IN PARKING LOT CORNERS SHALL BE LOCATED 3'-0" FROM THE FACE OF ADJACENT CURB TO CENTERLINE OF FRAME & LID.

INLET DETAIL

08-01-14 S-ST-INL

VALVE VAULT DETAIL

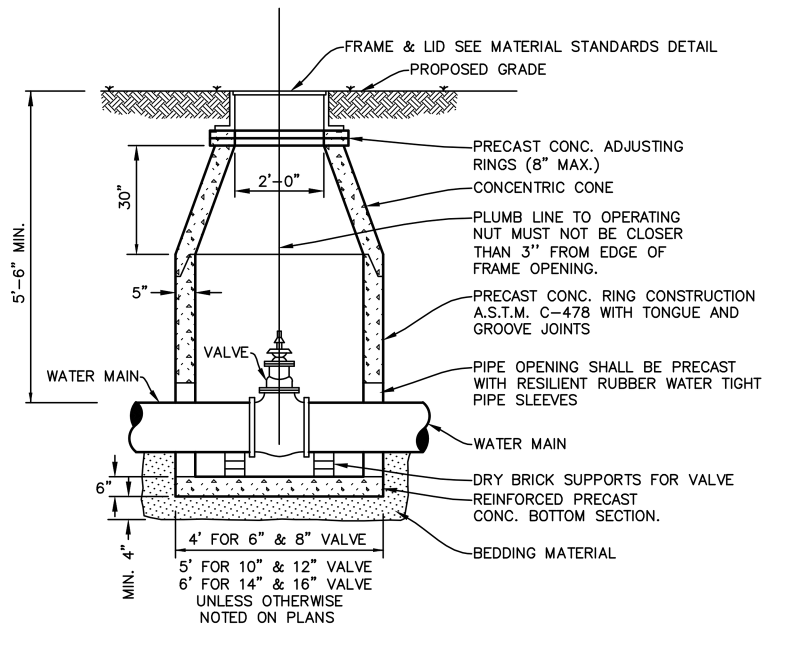

NOTES:
1. INSTALL MINIMUM 4" OF BEDDING MATERIAL UNDER STRUCTURE BOTTOM SECTION AND FILL ENTIRE EXCAVATION ALL AROUND STRUCTURE UP TO C.L. OF PIPE WITH BEDDING AND HAUNCHING MATERIAL.
2. PIPE OPENINGS SHALL BE CAST INTO WALL WITH RESILIENT RUBBER WATER TIGHT PIPE SLEEVES.
3. STRUCTURE FRAME, ADJUSTING RINGS AND ALL CONCRETE SECTIONS SHALL BE SET ON AND SEALED WITH BITUMINOUS MASTIC JOINT MATERIAL.
4. FILL LUG HOLES WITH BITUMINOUS JOINING COMPOUND.

VALVE VAULT DETAIL

01-01-13 S-WM-VV

WATER SERVICE DETAIL

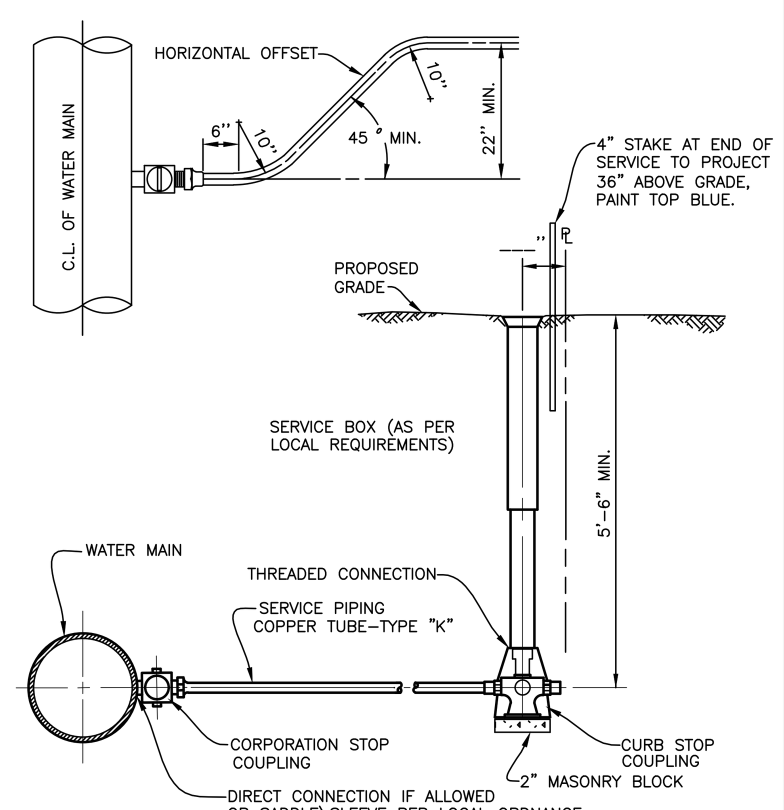

NOTES:
1. SERVICE PIPE TO BE WEAVED IN TRENCH TO ALLOW AT LEAST ONE (1) FOOT EXTRA LENGTH IN RUN TO BUILDING.
2. UPON COMPLETION OF WATER SERVICE CONSTRUCTION ALL BOXES ARE TO BE FULLY EXTENDED AND LEFT PROTRUDING ABOVE THE PROPOSED GRADE.
3. GRANULAR BACKFILL TO BE PLACED UNDER PAVEMENT AS SPECIFIED.

WATER SERVICE DETAIL

08-01-14 S-WM-SRV

THRUST BLOCKING DETAIL

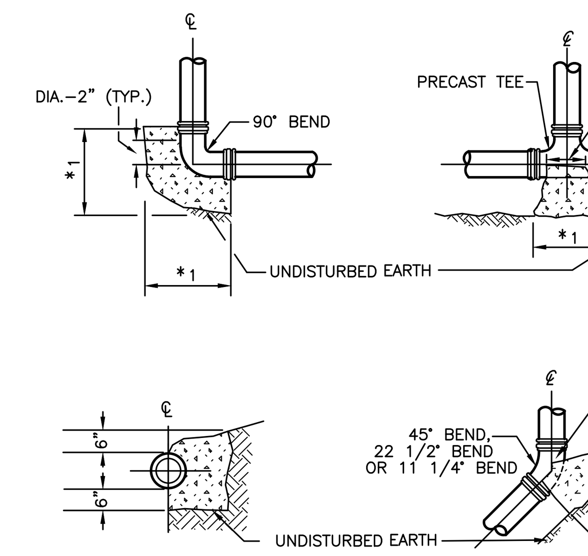

NOTES:
1. BLOCKING SHALL BE PROVIDED FOR ALL TEES, PLUG, CAPS, & 11 1/4° OR MORE BENDS AND SHALL HAVE A MINIMUM BEARING CAPACITY OF 2000 P.S.F.
2. THRUST BLOCKS TO BE CLASS "SI" CONCRETE.
3. BEARING AREAS OF UNDISTURBED EARTH SHALL HAVE A MINIMUN ALLOWABLE BEARING CAPACITY OF 2000 P.S.F.
4. BEARING AREA OF SOIL BASED ON 65 P.S.I. WATER MAIN PRESSURE.

*1. 1'-9" MIN. FOR 12" OR SMALLER DIA.
2'-9" MIN. FOR 16" DIA.
4'-0" MIN. FOR 24" DIA.

*2. 1'-3" MIN. FOR 12" OR SMALLER DIA.
2'-0" MIN. FOR 16" DIA.
2'-10" MIN. FOR 20" DIA.

THRUST BLOCKING DETAIL

08-01-14 S-WM-TB

PRESSURE CONNECTION VAULT DETAIL

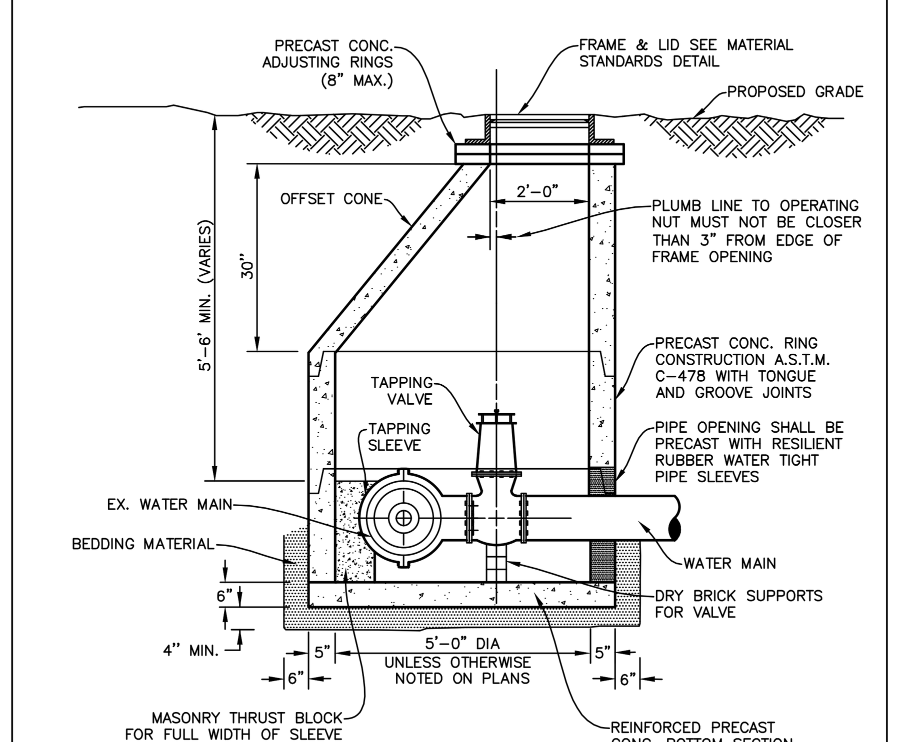

NOTES:
1. INSTALL MINIMUM 4" OF BEDDING MATERIAL UNDER STRUCTURE BOTTOM SECTION & FILL ENTIRE EXCAVATION ALL AROUND STRUCTURE UP TO C.L. OF PIPE WITH BEDDING AND HAUNCHING MATERIAL.
2. PIPE OPENINGS SHALL BE CAST INTO WALL WITH RESILIENT RUBBER WATER TIGHT PIPE SLEEVES.
3. STRUCTURE FRAME, ADJUSTING RINGS, & ALL CONCRETE SECTIONS SHALL BE SET ON AND SEALED WITH BITUMINOUS MASTIC JOINT MATERIAL.
4. FILL LUG HOLES WITH BITUMINOUS JOINING COMPOUND.

PRESSURE CONNECTION VAULT DETAIL

08-01-14 S-WM-PCVV

Manhard CONSULTING LTD
900 Woodlands Parkway, Vernon Hills, IL 60061 ph:847.634.5550 fx:847.634.0095 manhard.com
Civil Engineers • Surveyors • Water Resource Engineers • Water & Wastewater Engineers
Construction Managers • Environmental Scientists • Landscape Architects • Planners

DATE	REVISIONS	DRAWN BY
#		#

MANORS OF WHYTEGATE
LINCOLNSHIRE, ILLINOIS
CONSTRUCTION DETAILS

PROJ. MGR.: JGC
PROJ. ASSOC.: DEM3
DRAWN BY: DEM3
DATE: 3-17-15
SCALE: N.T.S.

SHEET 6 OF 8

AGCLN3 #

© 2015 MANHARD CONSULTING, LTD. ALL RIGHTS RESERVED

April 10, 2015 - 09:02 Dwg Name: P:\Agcln3\dwg\Eng\Preliminary\Details.dwg Updated By: dmanhardiii

Return to Agenda

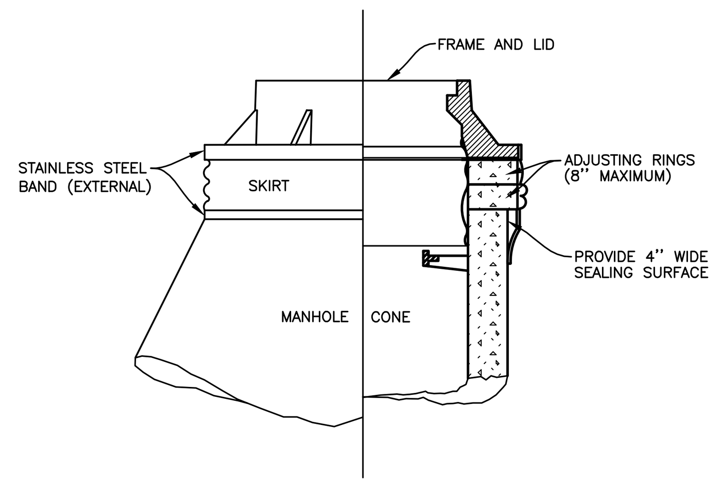

NOTES:
1. ELASTOMERIC BANDS (CHIMNEY SEALS) SHALL BE INSTALLED ON ALL SANITARY SEWAGE SYSTEM MANHOLES.
2. ''CRETEX'' EXTERNAL OR INTERNAL SEALS ARE RECOMMENDED; OTHER PRODUCTS OR OTHER DESIGN SOLUTIONS SHALL REQUIRE THE APPROVAL OF THE JURISDICTIONAL GOVERNING ENTITY.
3. (ELASTOMERIC BANDS) CHIMNEY SEALS SHALL BE INSTALLED IN ACCORDANCE WITH THE MANUFACTURER'S INSTRUCTIONS.

ELASTOMERIC BAND DETAIL
08-01-14 S-SAN-EB

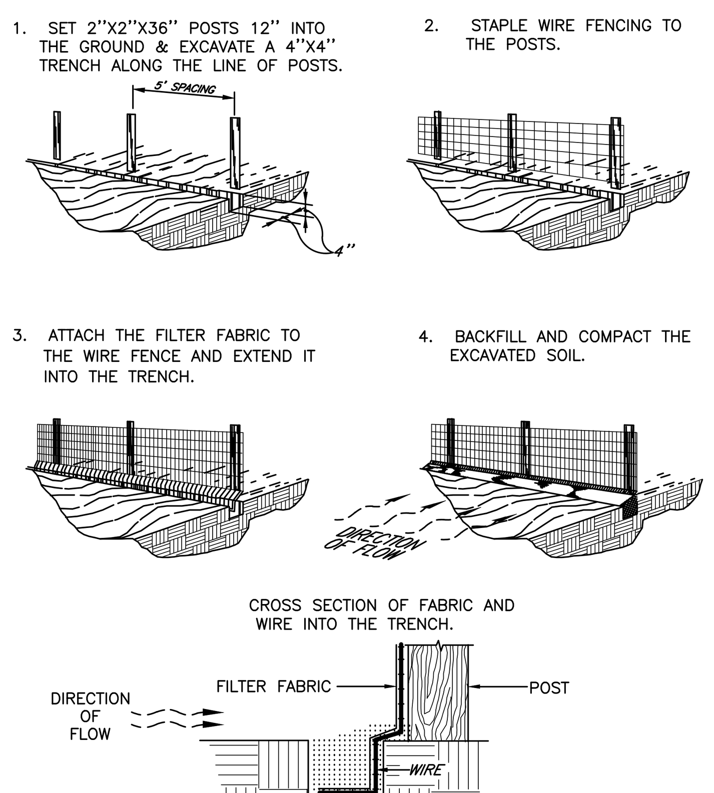

SILT FENCE DETAIL
03-17-15 AGCLN3

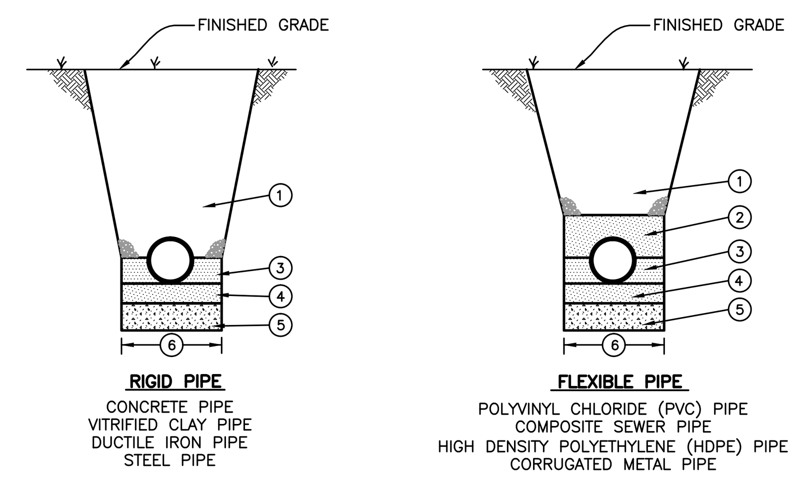

(1) MECHANICALLY COMPACTED SELECTED GRANULAR BACKFILL IN 6 INCH LIFTS UNDER OR WITHIN 2 FEET OF ANY PAVEMENT, CURB & GUTTER OR SIDEWALK. MACHINE COMPACTION OF EXCAVATED MATERIAL IN OTHER LOCATIONS WHERE SUITABLE.

(2) MECHANICALLY COMPACTED SELECTED GRANULAR BACKFILL IN 6 INCH LIFTS TO 12'' ABOVE TOP OF PIPE.

(3) RIGID PIPE:
WELL-COMPACTED HAUNCHING MATERIAL PLACED IN MAXIMUM 6 INCH LIFTS TO SPRING LINE OF PIPE
FLEXIBLE PIPE:
WELL-COMPACTED HAUNCHING MATERIAL PLACED IN MAXIMUM 6 INCH LIFTS TO SPRING LINE OF PIPE.

(4) 4'' WELL-COMPACTED BEDDING MATERIAL

(5) UNSUITABLE MATERIAL TO BE REMOVED AND REPLACED WITH GRANULAR FOUNDATION MATERIAL WHERE SOIL CONDITIONS WARRANT

(6) TRENCH WIDTH:
TRENCH DEPTH OF 5 FEET AND LESS, WITHOUT PROTECTION
OUTSIDE DIAMETER + 12 INCHES ON EACH SIDE OF THE PIPE.
TRENCH DEPTH OF 5 FEET AND LESS, WITH PROTECTION
OUTSIDE DIAMETER + 18 INCHES ON EACH SIDE OF THE PIPE.
TRENCH DEPTH OF GREATER THAN 5 FEET
OUTSIDE DIAMETER + 18 INCHES ON EACH SIDE OF THE PIPE.

PIPE INSTALLATION DETAIL
08-01-14 S-MS-PID

MATERIAL STANDARDS

ITEM	BRAND	PRODUCT
FIRE HYDRANTS (TRAFFIC MODEL)	MUELLER SUPER CENTURION WATEROUS PACER	A-423 WB-67
GATE VALVES SPECIFY SIZE NON-RISING STEM, 2'' NUT, M.J., OPEN LEFT	MUELLER (SIZE) AMERICAN FLOW CONTROL	A-2360-20L SERIES 2500
VALVE BOXES 3 PIECE	EAST JORDAN TYLER/UNION	SCREW ADJUSTING EXTENSION TYPE
CURB STOPS (SPECIFY SIZE)	MUELLER FORD	300 BALL VALVE BALL VALVE
CORPORATION VALVE (SPECIFY SIZE)	MUELLER FORD	H-15000 FB600 (AWWA/CC THREAD)
MANHOLES/CATCHBASINS/INLETS (SELF-SEALING LID WITH PROPER UTILITY MARKINGS	NEENAH CLOSED LID OPEN LID *1 SWALES AND DITCHES	R-1772 R-2502 C R-4340 B
CURB FRAME & GRATES (BICYCLE SAFE)	NEENAH ROLL/MOUNTABLE CURB B6.12 CURB	R-3501-D2A R-3281A *-3281-AL
WATER SERVICE SADDLES (ALL SERVICE SADDLES SHALL BE DOUBLE STRAP; BRONZE, NYLON COATED OR STAINLESS STEEL)	MUELLER FORD SMITH-BLAIR 3/4'' & 1''	DR2S FS 303 # 317
B-BOX (AT LEAST 1 1/4'' TOP SECTION) ARCH PATTERN PLUG STYLE LID	FORD MUELLER	EA2 CURB BOX

*1 WHEREVER STORMWATER COULD POSSIBLY ENTER STORM STRUCTURE

MATERIAL STANDARDS
08-01-14 S-MS-MATRL

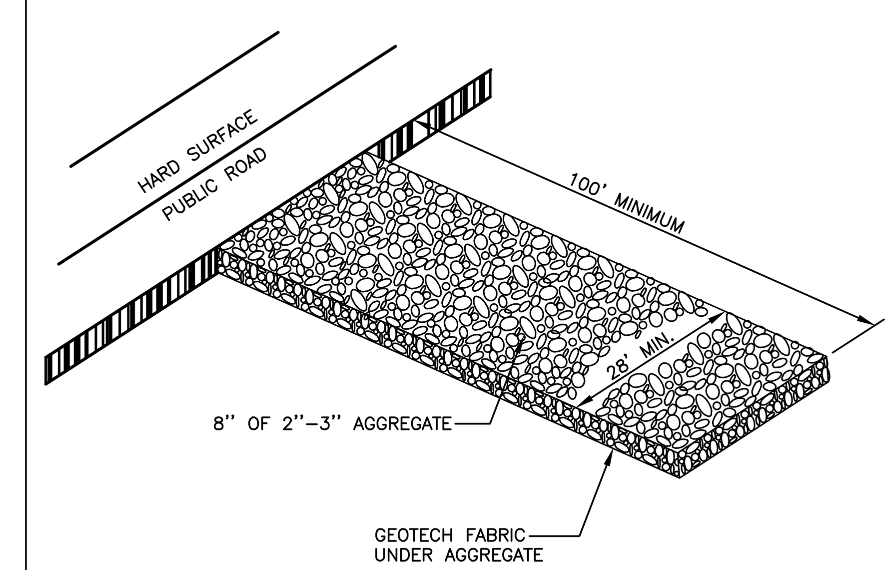

NOTE:
PERIODIC TOP DRESSING OF THE CONSTRUCTION EXIT MAY BE REQUIRED TO PREVENT TRACK OUT.

GRAVEL CONSTRUCTION ACCESS DETAIL
08-01-14 S-RD-GCE

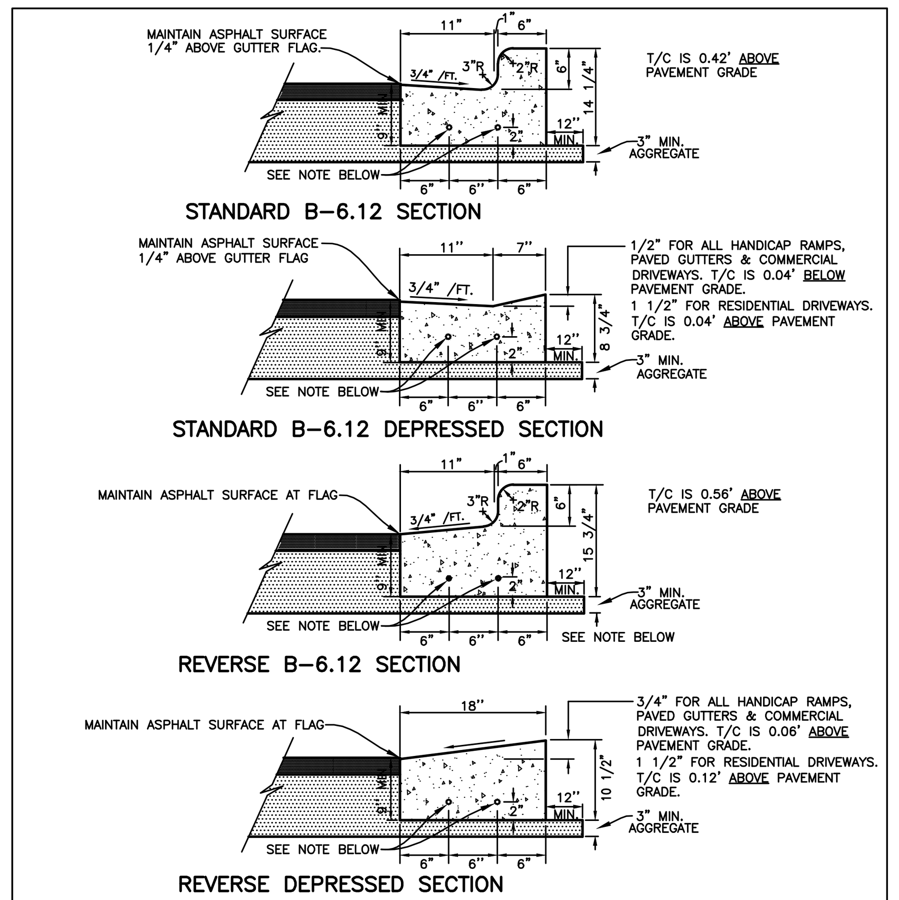

NOTE:
1. EXPANSION JOINTS TO BE LOCATED AT HIGH POINTS, UTILITY STRUCTURES, CURB RETURNS, COLD JOINTS OR 60' MAX. (SEE DETAIL)
2. CONTRACTION JOINTS ARE TO BE SAW CUT 2" DEEP AT 20' INTERVALS MAX.
3. INSTALL 2-#4 DEFORMED BARS X 10'-0" LONG OVER ALL TRENCHES.
4. TRANSITION CURB AND GUTTER AS NECESSARY TO MEET DRAINAGE STRUCTURE FRAME AND GRATE

MODIFIED B-6.12 CURB & GUTTER DETAIL
08-01-14 S-RD-B6CG

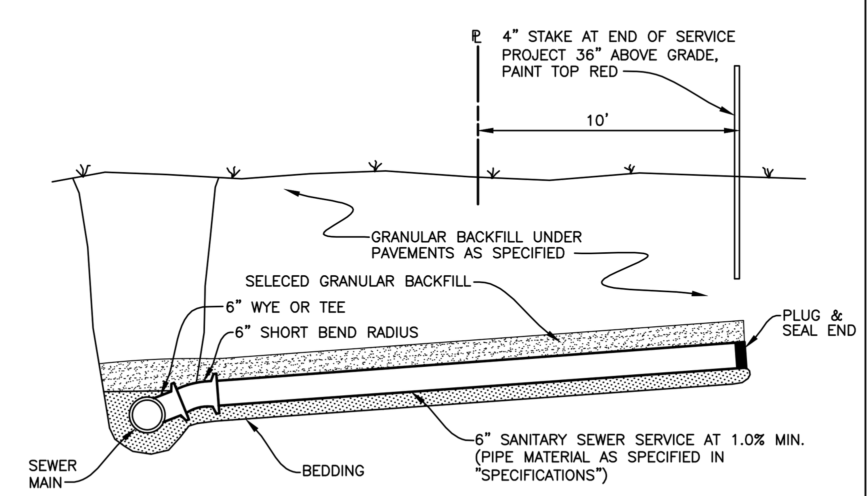

SANITARY SERVICE DETAIL
08-01-14 S-SAN-SRV

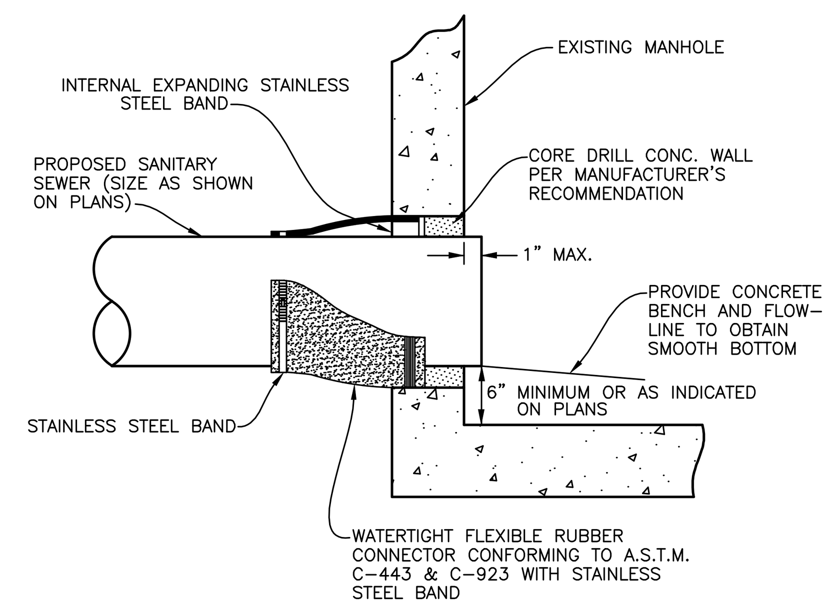

PIPE TO EXIST. SANITARY MANHOLE CONNECTOR DETAIL
08-01-14 S-SAN-PMHC

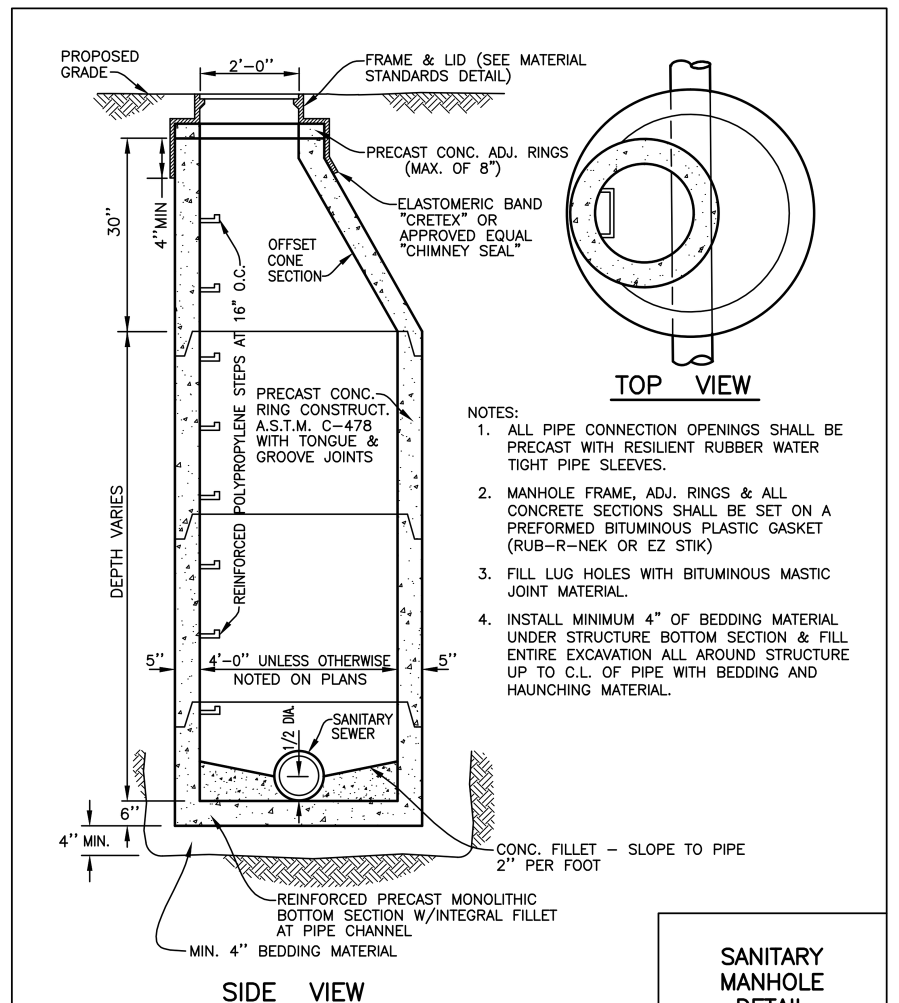

NOTES:
1. ALL PIPE CONNECTION OPENINGS SHALL BE PRECAST WITH RESILIENT RUBBER WATER TIGHT PIPE SLEEVES.
2. MANHOLE FRAME, ADJ. RINGS & ALL CONCRETE SECTIONS SHALL BE SET ON A PREFORMED BITUMINOUS PLASTIC GASKET (RUB-R-NEK OR EZ STIK)
3. FILL LUG HOLES WITH BITUMINOUS MASTIC JOINT MATERIAL.
4. INSTALL MINIMUM 4" OF BEDDING MATERIAL UNDER STRUCTURE BOTTOM SECTION & FILL ENTIRE EXCAVATION ALL AROUND STRUCTURE UP TO C.L. OF PIPE WITH BEDDING AND HAUNCHING MATERIAL.

SANITARY MANHOLE DETAIL
08-01-14 S-SAN-MH

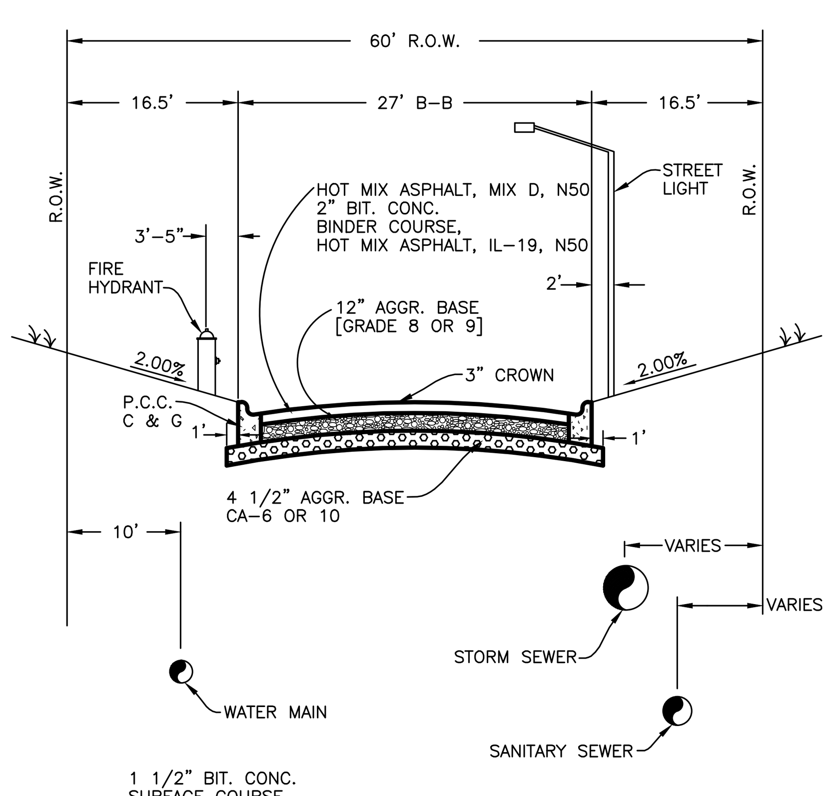

TYPICAL 27' ROADWAY SECTION 60' R.O.W. DETAIL
03-17-15 AGCLN3

DANDY SACK™

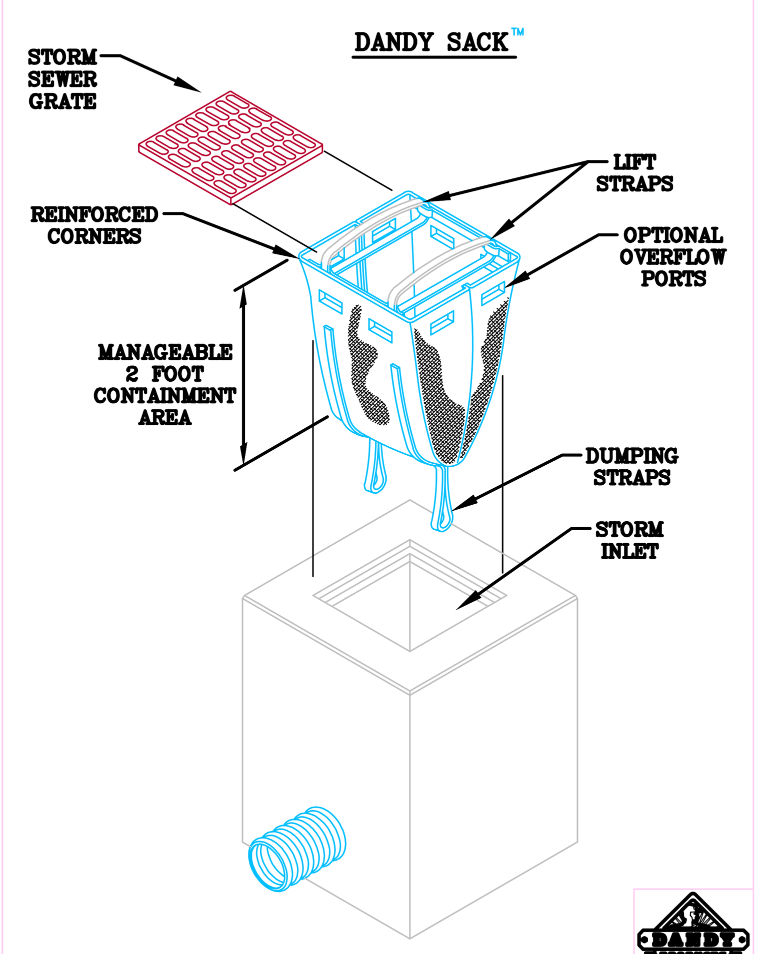

DETAIL OF INLET SEDIMENT CONTROL DEVICE

PROJECT:		DR. BY:
CITY/STATE:	DATE:	DR. NO:

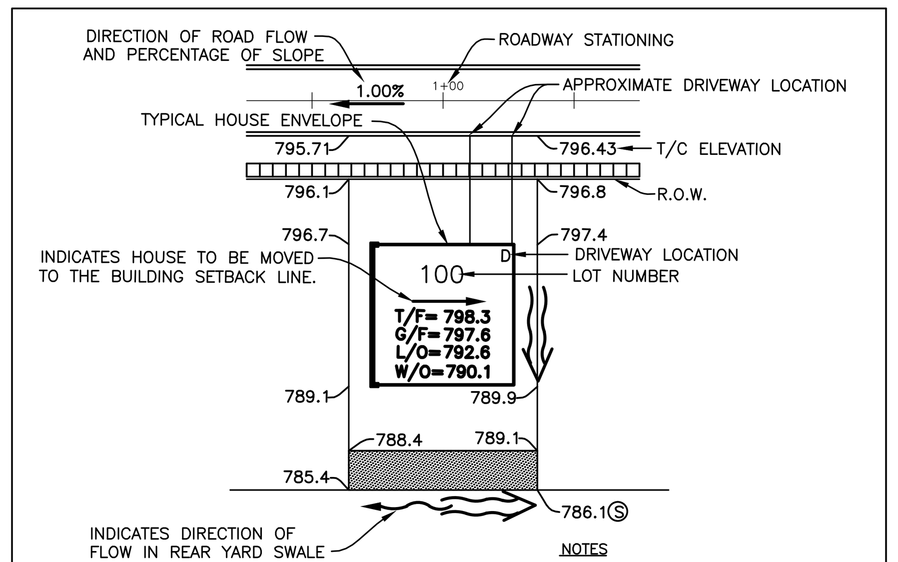

NOTES
1. MAX SLOPE FROM SIDEYARD SWALE ON PL TO GRADE AT FOUNDATION OR DROP SIDING (4:1).
2. HIGH POINT ON SIDE YARD SWALE AT FRONT OF HOUSE ON LOOKOUT AND WALKOUT HOMES.
3. HIGH POINT ON SIDE YARD SWALE AT MIDDLE OF HOUSE FOR CONVENTIONAL HOME.
4. LOW POINT ON SIDE YARD SWALE AT REAR OF HOUSE ON LOOKOUT AND WALKOUT.
5. RETAINING WALLS ARE SHOWN FOR APPROXIMATE LOCATION & ELEVATION ONLY. SEE ARCHITECTURAL PLANS FOR SPECIFICATIONS & DETAILS.
6. IF INDICATED, THE DRIVEWAY SLOPE REFLECTS THE SLOPE BETWEEN THE PROPERTY LINE AND THE BUILDING SETBACK LINE AT THE CENTERLINE OF DRIVEWAY.
7. DRIVEWAY LOCATIONS SHOWN ON PLAN ARE APPROXIMATE AND ARE NOT TO BE USED FOR LAYOUT OF CURB DEPRESSIONS.
8. ALL HOUSES ADJACENT TO EMERGENCY OVERFLOW ROUTES SHALL NOT HAVE WINDOW WELLS ON THAT SIDE.

LEGEND

T/F	PROPOSED TOP OF FOUNDATION
G/F	PROPOSED GRADE AT FOUNDATION (CONVENTIONAL)
L/O	PROPOSED GRADE AT FOUNDATION (LOOKOUT)
W/O	PROPOSED GRADE AT FOUNDATION (WALKOUT)
T/WALL	PROPOSED TOP OF RETAINING WALL
G	PROPOSED GROUND AT BOTTOM OF WALL. (NOT BOTTOM OF BURIED PORTION OF WALL)
	EMERGENCY OVERFLOW ROUTE
	TERRACE AREA (4:1 MAX.) SLOPE
	SWALE
(S)	SWALE GRADE SUMMIT
	INDICATES DROP SIDING MAY BE REQUIRED
	SIDEWALK
	PROPERTY LINE
796.1	PROPOSED GROUND ELEVATION
	RETAINING WALL

TYPICAL LOT GRADING DETAIL
08-01-14 S-MS-TLGP

DRAWN BY	REVISIONS	DATE
#		#
#		#
#		#
#		#
#		#
#		#
#		#
#		#
#		#

Manhard CONSULTING LTD™
900 Woodlands Parkway, Vernon Hills, IL 60061 ph:847.634.5550 fx:847.634.0095 manhard.com
Civil Engineers • Surveyors • Water Resource Engineers • Water & Wastewater Engineers
Construction Managers • Environmental Scientists • Landscape Architects • Planners

MANORS OF WHYTEGATE
LINCOLNSHIRE, ILLINOIS
CONSTRUCTION DETAILS

PROJ. MGR.: JGC
PROJ. ASSOC.: DEM3
DRAWN BY: DEM3
DATE: 3-17-15
SCALE: N.T.S.

SHEET 7 OF 8
AGCLN3 #

© 2015 MANHARD CONSULTING, LTD. ALL RIGHTS RESERVED

April 10, 2015 - 09:02 Dwg Name: P:\Agcln3\dwg\Eng\Preliminary\Details.dwg Updated By: dmanhardiii

Return to Agenda

08-01-14

MANHARD CONSULTING, LTD.

STANDARD SPECIFICATIONS

GENERAL CONDITIONS CONTRACTOR acknowledges and agrees that the use and reliance of these Plans and Specifications is sufficient consideration for CONTRACTOR'S covenants stated herein.

DEFINITION OF TERMS

a. "CLIENT" shall mean ___________________, which is the person or entity with whom Manhard Consulting, Ltd. has contracted with to prepare Civil Engineering PLANS and SPECIFICATIONS.

b. "ENGINEER" shall mean Manhard Consulting, Ltd., a Civil Engineering consultant on the subject project.

c. "PLANS and SPECIFICATIONS" shall mean the Civil Engineering PLANS and SPECIFICATIONS prepared by the ENGINEER, which may be a part of the contract documents for the subject project.

d. "CONTRACTOR" shall mean any person or entity performing any work described in the PLANS and SPECIFICATIONS.

e. "JURISDICTIONAL GOVERNMENTAL ENTITY" shall mean any municipal, county, state or federal unit of government from whom an approval, permit and/or review is required for any aspect of the subject project.

INTENT OF THE PLANS AND SPECIFICATIONS

The intention of the PLANS and SPECIFICATIONS is to set forth certain requirements of performance, type of equipment and structures, and standards of materials and construction. They may also identify labor and materials, equipment and transportation necessary for the proper execution of the work but are not intended to be infinitely determined so as to include minor items obviously required as part of the work. The PLANS and SPECIFICATIONS require new material and equipment unless otherwise indicated, and to require complete performance of the work in spite of omissions of specific references to any minor component part. It is not intended, however, that materials or work not covered by or properly inferred from any heading, branch, class or trade of the SPECIFICATIONS shall be supplied unless distinctly so noted. Materials or work described in words, which so applied have a well-known technical or trade meaning, shall be held to refer to such recognized standards.

INTERPRETATION OF PLANS AND SPECIFICATIONS

a. The CLIENT and/or CONTRACTOR shall promptly report any errors or ambiguities in the PLANS and SPECIFICATIONS to the ENGINEER. Questions as to meaning of PLANS and SPECIFICATIONS shall be interpreted by the ENGINEER, whose decision shall be final and binding on all parties concerned.

b. The ENGINEER will provide the CLIENT with such information as may be required to show revised or additional details of construction.

c. Should any discrepancies or conflicts on the PLANS or SPECIFICATIONS be discovered either prior to or after award of the contract, the ENGINEER's attention shall be called to the same before the work is begun thereon and the proper corrections made. Neither the CLIENT nor the CONTRACTOR may take advantage of any error or omissions in the PLANS and SPECIFICATIONS. The ENGINEER will provide information when errors or omissions are discovered.

GOVERNING BODIES

All works herein proposed shall be completed in accordance with all requirements of any JURISDICTIONAL GOVERNMENTAL ENTITY, and all such pertinent laws, directives, ordinances and the like shall be considered to be a part of these SPECIFICATIONS. If a discrepancy is noted between the PLANS and SPECIFICATIONS and requirements of any JURISDICTIONAL GOVERNMENTAL ENTITY, the CLIENT and/or the CONTRACTOR shall immediately notify the ENGINEER in writing.

LOCATION OF UNDERGROUND FACILITIES AND UTILITIES

When the PLANS and SPECIFICATIONS include information pertaining to the location of existing underground facilities and utilities (including but not limited to water mains, sanitary sewers, storm sewers, electric, telephone, gas and cable TV lines), such information represents only the opinion of the ENGINEER as to the approximate location and elevation of such facilities and utilities. At the locations wherein detailed positions of these facilities and utilities become necessary to the new construction, including all points of connection, the CONTRACTOR shall furnish all labor and tools to verify or definitely establish the horizontal location, elevation, size and material (if appropriate) of the facilities and utilities. The CONTRACTOR shall notify the ENGINEER at least 48 hours prior to construction if any discrepancies in existing utility information or conflicts with existing utilities exist. The ENGINEER assumes no responsibility whatever with respect to the sufficiency or accuracy of the information shown on the PLANS and SPECIFICATIONS relative to the location of underground facilities and utilities, nor the manner in which they are removed or adjusted.

It shall be the CONTRACTOR's responsibility prior to construction, to notify all Utility Companies of the intentions to begin construction and to verify the actual location of all such facilities and utilities. The CONTRACTOR shall also obtain from the respective Utility Companies the working schedules for removing or adjusting these facilities.

UNSUITABLE SOILS

The PLANS have been prepared by the ENGINEER based on the assumption that all soils on the project are suitable to support the proposed improvements shown. The CLIENT or CONTRACTOR shall immediately notify the ENGINEER if he discovers or encounters an obstruction that prevents the installation of the improvement according to the line and grades shown on the PLANS.

PROTECTION OF TREES

All trees that are not to be removed shall be protected from damage. Trees shall not be removed unless requested to do so in writing by the CLIENT.

NOTIFICATION OF OWNERS OF FACILITIES AND UTILITIES

The CONTRACTOR shall notify all applicable Jurisdictional Governmental Entities or utility companies, i.e., water, sewer, electric, telephone, gas and cable TV prior to beginning any construction so that said entity or company can establish the location and elevation of underground pipes, conduits or cables adjoining or crossing proposed construction.

TRAFFIC CONTROL

The CONTRACTOR shall provide when required by any JURISDICTIONAL GOVERNMENTAL ENTITY, all signs, equipment, and personnel necessary to provide for safe and efficient traffic flow in all areas where the work will interrupt, interfere or cause to change in any form, the conditions of traffic flow that existed prior to the commencement of any portions of the work. The CLIENT may, at his discretion, require the CONTRACTOR to furnish traffic control under these or other circumstances where in his opinion it is necessary for the protection of life and property. Emergency vehicle access shall be maintained at all times. Unless authorized by the CLIENT or CLIENT's construction representative, all existing access points shall be maintained at all times by the CONTRACTOR. The need for traffic control shall be anticipated by the CLIENT.

WORK AREA

The CONTRACTOR, his agents and employees and their employees and all equipment, machinery and vehicles shall confine their work within the boundaries of the project or work area specified by the Client. The CONTRACTOR shall be solely liable for damage caused by him or his agents and employees and their equipment, machinery and vehicles on adjacent property or areas outside designated work areas.

UTILITY POLES

It shall be the responsibility of the CONTRACTOR to arrange for the relocation or bracing of existing utility poles that may be within the working limits of this contract. It is expressly understood that all work and costs connected with the maintenance of these utility poles, their temporary relocations, etc., shall be the responsibility of the CLIENT or the CONTRACTOR.

RESTORATION

It is the intent of these SPECIFICATIONS that clean-up and final restoration shall be performed immediately upon completion of each phase of the work, both inside and outside the Project, or when so directed by the CLIENT so that these areas will be restored as nearly as possible to their original condition or better, and shall include but not be limited to, restoration of maintained lawns and rights-of-way, roadways, driveways, sidewalks, ditches, bushes, hedges, trees, shrubs, fences, mailboxes, sewers, drain tiles, water mains, etc.

CLEANING UP

The CONTRACTOR shall at all times keep the premises free from accumulations of waste material or rubbish caused by his employees or work, and at the completion of the work he shall remove all his rubbish, tools, scaffolding and surplus materials and shall leave his work "broom clean" or its equivalent, unless more exactly specified.

ROAD CLEANING

The CONTRACTOR shall maintain roadways adjoining the project site free from mud and debris at all times. If mud and/or debris is carried onto the roadways from vehicles entering onto the highway from either the CONTRACTOR's trucks, his employees' vehicles, or his material suppliers, the CONTRACTOR shall immediately remove said mud and/or debris.

SAFETY AND PROTECTION

The CONTRACTOR shall be solely and completely responsible for the conditions of the job site, including safety of all persons and property during performance of the work. This requirement shall apply continuously and not be limited to normal working hours. The CONTRACTOR shall comply with all applicable Laws and Regulations relating to the safety of persons or property, or to the protection of persons or property from damage, injury, or loss; and shall erect and maintain all necessary safeguards for such safety and protection. CONTRACTOR's duties and responsibilities for safety and for protection of the work shall continue until such time as all work is completed and the CLIENT has notified CONTRACTOR that the work is acceptable. The duties of the ENGINEER do not include review of the adequacy of either the CONTRACTOR's or the general public's safety in, on, or near the construction site.

HOLD HARMLESS

To the fullest extent permitted by law, any CONTRACTOR; material supplier or other entity by use of these plans and specifications hereby waives any right of contribution and agrees to indemnify, defend, save and hold harmless the CLIENT and ENGINEER and its agents, employees and consultants from and against all manner of claims, causes, causes of action, damages, losses and expenses, including but not limited to, attorneys' fees arising out of, resulting from or in connection with the performance of any work, pursuant to or with respect to these plans and specifications. However, this indemnity shall not be construed to indemnify ENGINEER, its consultants, agents or employees against its own negligence.

Claims, damages, losses and expenses as these words are used in the Agreement shall mean and include, but not be limited to (1) injury or damage occurring by reason of the failure of or use or misuse of any hoist, riggings, blocking, scaffolding or any and all other kinds of items of equipment, whether or not the same be owned, furnished or loaned by any part or entity, including any contractor; (2) all attorneys' fees and costs incurred in bringing an action to enforce the provisions of this indemnity; (3) costs for time expended by the indemnified party and its employees, at its usual rates plus costs or travel, long distance telephone and reproduction of documents and (4) consequential damages.

In any and all claims against the CLIENT or ENGINEER or any of their agents or employees and consultants by any party, including any employee of the CONTRACTOR or any Subcontractor, anyone directly or indirectly employed by any of them or anyone for whose acts any of them may be liable, the indemnification obligation shall not be limited in any way by any limitation on the amount of type of damages, compensation or benefits payable by or for the CONTRACTOR or any Subcontractor under workers' or workmen's compensation acts, disability benefit acts or other employee benefit acts or any insurance maintained by CONTRACTOR or any Subcontractor or any other party.

INSURANCE

Any party using or relying on these plans, including any contractor, material supplier, or other entity shall obtain, (prior to commencing any work) general public liability insurance insuring against all damages and claims for any bodily injuries, death or property damage arising out of any work, including the construction work provided for in these plans, and shall name the CLIENT and ENGINEER and its consultants, agents and representatives as additional insureds under such insurance policy; provided that any party using or relying on these plans having obligations to maintain specific insurance by reason of any agreement with CLIENT or any CONTRACTOR or ENGINEER shall provide evidence and certificates of insurance as required by such contract or agreement. Such insurance must contain a clause stating that the insurance is primary coverage for ENGINEER and ENGINEER's other applicable coverage is considered secondary. Such insurance shall not limit any liability of any party providing work or services or providing materials.

THIRD PARTY BENEFICIARY

Manhard Consulting, Ltd., the ENGINEER, is intended to be a third party beneficiary of this willing agreement and requirement.

Note: These Specifications are for Northern Illinois.

DETAILED SPECIFICATIONS

I. DEMOLITION

The CONTRACTOR shall coordinate with respective utility companies prior to the removal and/or relocation of utilities. The CONTRACTOR shall coordinate with the utility company concerning portions of work which may be performed by the Utility Company's forces and any fees which are to be paid to the utility company for their services. The CONTRACTOR is responsible for paying for all fees and charges.

Should removal and/or relocation activities damage features indicated to remain, the CONTRACTOR shall provide new materials/structures in accordance with the contract documents. Except for materials designed to be relocated on this plan, all other construction materials shall be new.

Prior to demolition occurring, all erosion control devices are to be installed.

All existing utility lines and conduits located under proposed buildings shall be removed and properly backfilled. All utility lines and conduits located under drives, on-site roads, parking lots or sidewalks shall be filled with a flowable backfill and end plugged. All existing structures shall be removed.

CONTRACTOR shall perform all demolition work in accordance with all applicable Federal, State and local requirement.

The CONTRACTOR is responsible for demolition, removal and disposal (in a location approved by all JURISDICTIONAL GOVERNING ENTITIES) of all structures, pads, walls, flumes, foundations, road, parking lots, drives, drainage structures, utilities, etc., such that the improvements shown on these plans can be constructed. All facilities to be removed shall be undercut to suitable material and brought to grade with suitable compacted fill material per the specifications.

The CONTRACTOR is responsible for removing all debris from the site and disposing the debris in a lawful manner.

The CONTRACTOR is responsible for obtaining all permits required for demolition and approval.

Electrical, telephone, cable, water, fiber optic cable and/or gas lines needing to be removed shall be coordinated by the CONTRACTOR with the affected utility company.

CONTRACTOR must protect the public at all times with fencing, barricades, enclosures, and other appropriate best management practices.

Continuous access shall be maintained for surrounding properties at all times during demolition.

All fire access lanes within the project area shall remain in service, clean of debris, and accessible for use by emergency vehicles.

The CONTRACTOR shall coordinate water main work with the Fire Department and the JURISDICTIONAL GOVERNING ENTITY to plan the proposed improvements and to ensure adequate fire protection is constantly available to the facility and site throughout this specific work and through all phases of construction. CONTRACTOR shall be responsible for any required water main shut offs with the JURISDICTIONAL GOVERNING ENTITY during construction. Any costs associated with water main shut offs will be the responsibility of the CONTRACTOR and no extra compensation will be provide.

CONTRACTOR shall maintain all existing parking areas, sidewalks, drives, etc. clear and free from any construction activity and/or material to ensure easy and safe pedestrian and vehicular traffic to and from the site. CONTRACTOR shall coordinate/phase all construction activity within proximity of the building and utility interruptions with the facility manager to minimize disturbance and inconvenience to facility operations.

CONTRACTOR may limit saw-cut and pavement removal to only those areas where it is required as shown on these construction plans, however if any damage is incurred on any of the surrounding pavement, etc. the CONTRACTOR shall be responsible for it's removal and repair.

Any existing wells encountered shall be exposed and sealed 3' below proposed finish grade by the CONTRACTOR in accordance with Section 920.120 (latest edition) of the Illinois Water Well Construction Code, Department of Public Health, and all applicable local rules and regulations.

Any existing septic tanks and grease traps encountered shall have all liquids and solids removed and disposed of by a licensed commercial hauler in accordance with JURISDICTIONAL GOVERNING ENTITY regulations, and the tank and grease traps shall then be filled with suitable materials or removed from the site and disposed of by the CONTRACTOR.

Voids left by any item removed under any proposed building, pavement, walk, etc. or within 24" thereof shall be filled and compacted with suitable materials by the CONTRACTOR.

The CONTRACTOR shall be responsible for the disconnection of utility services to the existing buildings prior to demolition of the buildings.

Any material containing asbestos found within existing structures shall be removed from the site and disposed of off-site by the CONTRACTOR in accordance with County, State and Federal regulations.

CONTRACTOR shall develop and implement a daily program of dust control and shall submit and obtain JURISDICTIONAL GOVERNING ENTITY approval of dust control procedures prior to demolition of any structures. Modification of dust control procedures shall be performed by the CONTRACTOR to the satisfaction of the JURISDICTIONAL GOVERNING ENTITY as requested.

The CONTRACTOR shall coordinate all demolition with the JURISDICTIONAL GOVERNING ENTITY and CLIENT to ensure protection and maintenance of sanitary sewer and water utilities as necessary and to provide stormwater conveyance until new facilities are constructed, tested and placed into operation.

The locations of all existing utilities shown on this plan have been determined from the best information available and are given for the convenience of the CONTRACTOR and are not to be interpreted as the exact location, or as the only obstacles that may occur on the site. The ENGINEER assumes no responsibility for their accuracy. Prior to the start of any demolition activity, the CONTRACTOR shall notify the utility companies for location of existing utilities and shall verify existing conditions and proceed with caution around any anticipated features.

The CONTRACTOR is responsible for removing the existing irrigation system in the areas of proposed improvements. the contractor shall cap the existing irrigation system to remain such that the remaining system shall continue to function properly.

The parking lot shall be completed in sections so that it does not interrupt the facility operations. the CONTRACTOR shall coordinate with the construction manager for work to be preformed.

II. EARTHWORK

STANDARDS

This work shall be completed in conformance with the applicable sections of the Standard Specifications for Road and Bridge Construction, Department of Transportation, State of Illinois, latest edition except as modified below.

SOIL BORING DATA

Copies of results of soil boring and reports, if such borings were taken by the CLIENT in the vicinity of the proposed construction site, should be made available by the CLIENT to the CONTRACTOR. These borings are presented for whatever purpose the CONTRACTOR chooses to make of them. The ENGINEER makes no representation or warranty regarding the number, location, spacing or depth of borings taken, nor of the accuracy or reliability of the information given in the results thereof.

Further, the ENGINEER does not assume responsibility for the possibility that during construction, the soil and groundwater condition may be different than indicated. Neither does the ENGINEER assume responsibility for variations of soil and groundwater at location between borings. The CONTRACTOR is required to make its own borings, explorations and observations to determine soil and groundwater conditions.

EARTHWORK CALCULATIONS AND CROSS SECTIONS

The CONTRACTOR understands that any earthwork calculations, quantities or cross sections that have been furnished by the ENGINEER are for information only and are provided without any guarantee by the CLIENT or ENGINEER whatsoever as to their sufficiency or accuracy. CONTRACTOR warrants that he has performed his own subsurface investigations as necessary and his own calculations and cross sections to determine site soil conditions and earthwork volumes. The ENGINEER makes no representation or guarantee regarding earthwork quantities or that the earthwork for this project will balance due to the varying field conditions, changing soil types, allowable construction to tolerances and construction methods that are beyond the control of the ENGINEER.

CLEARING, GRUBBING AND TREE REMOVAL

The site shall be cleared, grubbed, and trees and stumps removed where designated on the PLANS. Trees designated to remain shall be protected from damage.

TOPSOIL STRIPPING

Upon completion of demolition, clearing, grubbing and tree removal, all topsoil shall be stripped from under all buildings and pavements areas, and other areas necessary to complete the work. Topsoil stripped shall be placed in stockpiles in locations as designated by the CLIENT.

TOPSOIL RESPREAD

Upon completion of roadway and/or parking lot improvements and installation of underground utilities a minimum of four inches (4") of topsoil shall be respread over all unpaved areas which have been disturbed by earthwork construction, except building pads and other designated areas, which shall be kept free from topsoil.

SEEDING

Upon completion of topsoil respread, the CONTRACTOR shall apply seed and fertilizer to all respread areas in accordance with IDOT standards or as designated on landscape drawings and specifications provided by the CLIENT.

SODDING

Upon completion of topsoil respread, the CONTRACTOR shall install sod to all areas designated on the plans or as designated on the landscape drawingsand specifications provided by the CLIENT.

EXCAVATION AND EMBANKMENT

Upon completion of topsoil stripping, all excavation and embankments shall be completed as shown on the PLANS. All suitable excavated materials shall be hauled, placed (moisture conditioned if necessary) and compacted in the embankment areas. The CONTRACTOR shall include all dewatering, temporary ditching and culverts necessary to complete the excavation and embankment.

Specifically included in the scope of Excavation and Embankments is grading and shaping of all cut or fill areas including swales and ditches; handling of sewer spoil, etc., and all work required to provide positive drainage at the end of each working day and upon completion of a section.

The CONTRACTOR shall be responsible for the excavation of all swales and ditches and for the excavation or filling of the roads, building pads and parking lots within the work limits to lines & grades shown on the plans. He shall be responsible for obtaining compaction in accordance with the minimum values listed in the table below for all embankments unless more stringent values are listed in the soils report, and to use any method approved by the CLIENT necessary to obtain this compaction (i.e., soil fabric or any undercutting that may be required).

Type Material	Percent Compaction Standard	Pavement & Floor Slabs	Grass Areas
Sandy Soils	Modified Proctor	95%	90%
Clayey Soils	Standard Proctor	95%	90%

unless approved otherwise in the soils report or by the CLIENT.

The CONTRACTOR shall notify the CLIENT if proper compaction cannot be obtained so that the CLIENT may determine what remedial measures may be needed.

A soils testing firm employed by the CLIENT shall determine which soils are unsuitable. Materials in their natural state being defined as unsuitable that would be suitable material if moisture conditioned, shall be conditioned by the CONTRACTOR and used as suitable embankment material or hauled from the site.

For purposes of definition, unsuitable material shall be as follows unless determined otherwise by the Soils Engineer:

1. Any soil whose optimum moisture content exceeds 25%.
2. Any cohesive soil with an unconfined compressive strength of 1.5 tons per square foot or less.
3. Any soil whose silt content exceeds 60% by weight.
4. Any soil whose maximum density is less than 100 pounds per cubic foot.
5. Any soil containing organic, deleterious, or hazardous material.

Upon completion of excavation and shaping of the water retention areas intended to maintain a permanent pool of water, all silt seams and granular or sandy soils shall be removed to a minimum depth of three feet below the subgrade and replaced with an impermeable clay liner, including adjacent to and under storm sewer inlets and outlets. It is the intent of these PLANS and SPECIFICATIONS that the CONTRACTOR shall prepare the lake bottoms, side slopes, and compaction thereof so that the lakes will maintain the proposed normal water level and that leakage does not exceed ½ inch per week.

Ditches and swales are to be excavated to the lines and grades indicated on the PLANS. All suitable materials excavated from the ditches shall be used in construction of the embankments.

The CONTRACTOR shall notify the CLIENT immediately upon encountering groundwater during excavation. If in the opinion of the CLIENT or the JURISDICTIONAL GOVERNING ENTITY this condition necessitates the installation of perforated drain tile bedded in washed gravel or open storm sewer joints wrapped with fabric, the CONTRACTOR shall install the same.

During excavation and embankment, grades may be adjusted to provide an overall site earthwork balance. The CONTRACTOR shall cooperate fully with the CLIENT in adjustment of grades, construction methods and placement of material to meet the above goals and shall immediately advise CLIENT if he believes that the earthwork will not balance.

It is the intent of these PLANS that storm waters falling on the site be diverted into sedimentation / lake / detention basins during construction. The CONTRACTOR shall construct and maintain any temporary ditches or swales that are necessary to accomplish this prior to beginning mass excavation.

EROSION CONTROL

Suitable erosion control practices shall be maintained by the CONTRACTOR in accordance with Illinois Urban Manual and all applicable Soil Erosion and Sedimentation Control ordinances and the PLANS.

UNDERCUTTING DURING EARTHWORK

If the subgrade cannot be dried adequately by discing as outlined above for placement of material to planned grades and if the CLIENT determines that the subgrade does not meet the standards set forth above, the CLIENT may require undercutting.

MISCELLANEOUS CONTRACT ITEMS

The following items may be required at the CLIENT's option, as indicated on the PLANS or as required by the JURISDICTIONAL GOVERNING ENTITY:

(1) **GEOTEXTILE FABRIC**

Geotextile fabric or approved equal shall be provided in areas as designated by the CLIENT, as indicated on the PLANS or as required by the JURISDICTIONAL GOVERNING ENTITY where proper compaction of embankments over existing soft soils is not possible. Geotextile fabric shall meet the material specifications of and shall be installed in accordance with the above standards.

(2) **EROSION CONTROL BLANKET**

Erosion control blanket or approved equal shall be provided in areas as designated by the CLIENT, as indicated on the PLANS or as required by the JURISDICTIONAL GOVERNING ENTITY for the stabilization of disturbed areas. Erosion control blanket shall meet the material specifications of and shall be installed in accordance with the above standards, the Illinois Urban Manual and/or the details shown on the PLANS.

III. UNDERGROUND IMPROVEMENTS

A. GENERAL

STANDARDS

All underground improvements shall be constructed and tested in accordance with the Standard Specifications for Water and Sewer Construction in Illinois and Standard Specifications for Road and Bridge Construction, Department of Transportation, State of Illinois, latest edition. In the event of conflicting guidelines, the more restrictive shall govern.

SELECTED GRANULAR BACKFILL

Selected Granular Backfill shall be required for all sewer and water main trenches lying under existing or proposed streets, driveways, parking lots and within 24" thereof, and where noted on PLANS. All material placed in such trenches shall be in accordance with the above standards.

MANHOLES, CATCH BASIN, INLETS & VALVE VAULTS

All Manholes, Catch Basins, Inlets, and Valve Vaults shall be constructed of reinforced precast concrete ring construction with tongue and groove joints in conformance with the latest revision of ASTM designation C-478. All joints between sections and frames (except sanitary manholes, see Section IIB Manholes, below) shall be sealed with mastic type bituminous jointing compound. CONTRACTOR shall remove all excess mastic on inside of structure and butter joints with mortar. Manholes are to have offset cones except that no cone shall be used on storm manholes 6'-0" deep or less in which case a reinforced concrete flat top section shall be used, and Valve Vaults shall have concentric cones. Only concrete adjustment rings will be permitted where necessary and shall be limited to two adjustment rings totaling not more than 8" in height. All manholes and catch basin steps shall be copolymer polypropylene with continuous ½" steel reinforcement as manufactured by MA Industries, or approved equal.

AUGER/BORING AND CASING

Casing pipe shall be welded steel pipe, installed where shown on the PLANS. The carrier pipe shall be securely blocked and banded and sanitary and storm sewers shall maintain the specified gradient. Upon installing the carrier pipe the ends shall be sealed with hydraulic cement.

AUGER (OPEN BORE)

The CONTRACTOR shall auger (open bore) where noted on PLANS.

HORIZONTAL AND VERTICAL SEPARATION OF WATER AND SEWER MAINS

Horizontal and vertical separation of water and sewer mains shall be in accordance with Standard Specifications for Water and Sewer Construction in Illinois Section 41-2.01A and 41-2.01B and Standard Drawing 18, 19, 20, 21, 22, 23 and 24.

STRUCTURE ADJUSTMENTS

Structures shall be adjusted to the finished grade as shown on PLANS.

B. SANITARY SEWERS AND APPURTENANCES

SANITARY SEWER PIPE

Sanitary sewer pipe including building services, shall conform to the following:

(1) Polyvinyl Chloride (PVC) Sewer Pipe shall conform to ASTM D3034 (4-inch thru 15-inch) or ASTM F679 (18-inch thru 48-inch) minimum SDR 26 with flexible elastomeric seal gasket gasketed joints conforming to ASTM D3212 and F477.

(2) Ductile Iron Sewer Pipe shall conform with ANSI/AWWA C151/A21.51 Class 50, cement lined with push on type joints conforming to ANSI/AWWA C111/A21.11.

(3) Extra Strength Clay Sewer Pipe shall conform with ASTM Specification C700 (glazed) with ASTM D1784 type joints conforming to Clow NO-BEL (ESVCP), with flexible gasket meeting ASTM C425 (MWRD only).

Sanitary sewers shall include bedding and backfilling.

MANHOLES

Manholes shall be constructed in conformance with Section IIIA Manholes, etc. above. The concrete base and bottom section shall be constructed of precast reinforced concrete monolithically cast sections including benches, pipe connection and invert flow lines. Manhole frame and lids shall be Neenah R-1772 or approved equal, with lids imprinted "SANITARY", with recessed pick holes. Manhole joints between adjustment rings and frames and between manhole sections shall be set on preformed plastic gasket consisting of a homogeneous blend of refined hydrocarbon resins and plasticizing compounds reinforced with inert mineral filler to provide a water tight seal. All pipe connection openings shall be precast with resilient rubber watertight pipe sleeves. A 10" elastomeric band (chimney seal) shall be installed extending from the manhole top to the manhole frame as shown on detail. Manholes shall include steps, frame & grate, bedding, and trench backfill.

FOUNDATION, BEDDING AND HAUNCHING

Foundation, Bedding and Haunching shall be wet coarse aggregate or moist fine aggregate in accordance with the above standards and placed as shown on the detail.

TESTING

Sanitary sewers shall be air tested and tested for deflection in accordance with the requirements of Section 31-1.12 "TESTING AND INSPECTION FOR ACCEPTANCE OF SANITARY SEWERS" of the Standard Specifications for Water and Sewer Construction in Illinois or the JURISDICTIONAL GOVERNING ENTITY, whichever is more restrictive. In addition, a televised inspection of the completed sanitary sewers shall be conducted and a copy of the videotape and report furnished to the JURISDICTIONAL GOVERNING ENTITY.

All sanitary manholes are to be tested for water tightness in accordance with ASTM C969 "Standard Practice for Infiltration and Exfiltration Acceptance Testing of Installed Precast Concrete Pipe Sewer Lines", or ASTM C1244 "Standard Test Method for Concrete Sewer Manholes by the Negative Pressure (Vacuum) Test".

SERVICES

A wye branch or "tee" and sanitary service line, properly plugged and sealed shall be constructed as shown on the PLANS. The ends of all services shall be marked with a 4"x4" post extending 36" above grade and painted red. The CONTRACTOR shall keep accurate records of all Wye or Tee locations as measured from the downstream manhole as well as the service lengths and furnish same to CLIENT.

RISERS

Risers shall be constructed in locations as shown on the PLANS and according to the detail.

DROP MANHOLE CONNECTIONS

Drop manhole connections to existing manholes shall be constructed according to the PLANS and the detail.

SANITARY SEWER FORCE MAIN

Sanitary sewer force main shall conform to the following:

(1) Polyvinyl Chloride (PVC) Pressure Pipe conforming to the latest revision of ANSI/AWWA C900, Class 150 with integral bell and flexible elastomeric gasket joints conforming to ASTM F477.

(2) Ductile iron cement lined pipe conforming to the latest revision of ANSI/AWWA C151/A21.51, Thickness Class 50, minimum 150 psi working pressure with "push on" type joints.

Force mains shall have a minimum of five feet six inches (5'-6") of cover and shall include bedding and trench backfill.

Upon completion of installation, force mains are to be plugged and pressure tested at 2 times the working pressure or total dynamic head for a period of 10 minutes, with no loss of pressure or as required by the JURISDICTIONAL GOVERNING ENTITY, whichever is more stringent.

TELEVISION INSPECTION

Upon completion of construction a television inspection of the sanitary sewer system shall be performed on all portions of the sewer if required by the JURISDICTIONAL GOVERNING ENTITY. Videotapes and written report of all television inspections shall be provided to the CLIENT. The form of report and type and format of the videotape shall be approved by the JURISDICTIONAL GOVERNING ENTITY.

All sewers and appurtenances shall be cleaned prior to inspection and testing required by this section.

All defects and corrective work required as the result of television inspection shall be performed by the CONTRACTOR without delay. All dips, cracks, leaks, improperly sealed joints and departures from approved grades and alignment shall be repaired by removing and replacing the involved sections of pipe. Upon completion thereof, the sewer shall be retested and such further inspection made as may appear warranted by the CLIENT.

MISCELLANEOUS

All floor drains shall be connected to the sanitary sewer.

C. WATER MAINS AND APPURTENANCES

WATER MAIN PIPE (3" AND LARGER)

Water main pipe shall conform to the following:

(1) Ductile iron cement lined pipe conforming to the latest revision of ANSI/AWWA C151/A21.51, Thickness Class 52, minimum 150 psi working pressure with "push on" type joints.(2)

(2) Polyvinyl Chloride Pipe (PVC) conforming to the latest revision of ANSI/AWWA C900 (4-inch thru 12-inch) or ANSI/AWWA C905 (14-inch thru 48-inch) with a pressure rating of 235 psi, SDR 18 in accordance with ASTM D2241. Joints shall be pressure rated in accordance with ASTM D3139 with elastomeric seals in accordance with ASTM F477.

Installation shall be in accordance with ANSI/AWWA C600 (Ductile Iron) or ANSI/AWWA C605 (PVC). All water main shall have mechanical joint cast iron or ductile iron fittings in accordance with ANSI/AWWA C110/A21.10 or compact ductile iron fittings in accordance with ANSI/AWWA C153/A21.53 with 250 psi working pressure.

Poured or monolithic concrete thrust blocks are required to brace all tees, plugs, caps, and bends of 11 1/4 degree deflection or greater. Minimum cover for all water mains, including services, shall be 5'-6" from the finished grade. Water main shall include bedding and backfilling.

WATER VALVES

All valves shall be resilient wedge gate valves conforming to the latest revision of ANSI/AWWA C515, with a rated working pressure of 200 psi in accordance with JURISDICTIONAL GOVERNING ENTITY requirements, except that butterfly valves conforming to ANSI/AWWA C504 shall be constructed on all water mains 16" diameter and larger. Valves shall be non-rising stem and shall close by turning clockwise.

VALVE VAULTS

Valve vaults shall be constructed in conformance with Section IIA Manholes, etc. above. Frame and lids shall be as approved by the JURISDICTIONAL GOVERNING ENTITY and shall be imprinted "WATER".

VALVE BOXES

Valve boxes shall be constructed in conformance with the standard detail. Valve boxes shall be cast iron extension screw type having lids imprinted with the letters "WATER".

FIRE HYDRANTS

Fire Hydrants shall be per JURISDICTIONAL GOVERNING ENTITY requirements. All fire hydrants shall be located as shown on the PLANS and shall be painted in a manner acceptable to the JURISDICTIONAL GOVERNING ENTITY after installation and shall be adjusted to final grade.

TAP, STOPS AND BOX

The CONTRACTOR shall determine from the JURISDICTIONAL GOVERNING ENTITY as to the exact style, type, and manufacture of Corporation stops, ground key stops and services boxes preferred by the JURISDICTIONAL GOVERNING ENTITY and shall furnish same.

SMALL WATER SERVICES (2" DIAMETER OR LESS)

Water services shall be type K copper size as shown on PLANS, and constructed where shown on the PLANS. The ends of all services shall be marked with a 4"x4" post extending 36" above grade and painted blue. The CONTRACTOR shall keep accurate records of tap locations and service box locations, as well as the service lengths and furnish same to CLIENT. Water services shall include bedding and backfilling.

DISINFECTION

Disinfections shall meet all of the requirements of the State of Illinois, Environmental Protection Agency, Public Water Supplies Division. The safe quality of the water supply shall be demonstrated by bacteriological analysis of samples collected at sampling taps on at least two consecutive days following disinfection of the mains and copies of the said report submitted to the JURISDICTIONAL GOVERNING ENTITY and the CLIENT.

PRESSURE TEST

Allowable leakage, test pressure and duration shall be as per the requirements of the JURISDICTIONAL GOVERNING ENTITY.

PRESSURE CONNECTION TO EXISTING WATER MAIN

The CONTRACTOR shall maintain system pressure on existing water main at all times. Existing water main shall be located and material excavated, and valve basin slab and main supports installed. The existing water main shall be cleaned and the exterior disinfected prior to installing the tapping tee (material to conform to AWWA C110). The tapping valve shall be installed (valve to conform to AWWA C500) and the pressure tap completed in accordance with the detail on the plans. Valve shall be constructed in conformance with the detail. Payment for pressure connection to existing water main shall include disinfection, tapping valve and tee, valve vault, frame and lid, bedding, and trench backfill.

DRY CONNECTION TO EXISTING WATER MAIN

A dry connection to existing water main shall include a connection to an existing water main stub where shown on the PLANS. The CONTRACTOR shall obtain approval of the JURISDICTIONAL GOVERNING ENTITY to shut down any main, including submittal of a schedule of the time of shut off and the time the line will be returned to service. All mains shut down that are opened to atmosphere must be disinfected prior to returning main into service.

POLYETHYLENE TUBE (FOR DUCTILE IRON WATER MAIN ONLY)

The CLIENT, or JURISDICTIONAL GOVERNING ENTITY may request that portions of the water main be enclosed in a polyethylene tube, Clow F-191 or approved equal installed as per the manufacturer's recommendations, should soil conditions so warrant its use.

FOUNDATION, BEDDING AND HAUNCHING

Foundation, Bedding and Haunching shall be wet coarse aggregate or moist fine aggregate in accordance with the above standards and placed as shown on the detail.

TRACER WIRE

If the distance between valves when installing PVC pipe exceeds 1,000', tracer wire stations will be required for current induction. Tracer wire stations in grass areas will be Rhino TriView Flex Tracing Wire Stations or approved equal. In paved areas, they will be Valvco Tracer Wire Access Box for H2O loading or approved equal.

For open cut construction, using PVC pipe, a continuous, insulated, 12 gauge copper wire suitable for direct burial shall be taped on top of all piping to provide for locating following construction. This wire shall be securely terminated inside every valve vault on stainless steel hardware with an exposed lead of at least 12". A mechanically secure and soldered connection shall be provided for all wire splices. Where construction is by directional drilling or similar trenchless technology the tracer wire shall be 3/16" 7x19 PVC coated stainless steel aircraft cable with minimum breaking strength of 3,700 lbs (Lexco, Chicago, IL). Or Trace-Safe water blocking tracerwire RT series 19 gauge conductor (RT 1802W water, RT 1803W sewer).

Before final approval of any water main, there will be a monitored tracer wire continuity test in order to confirm proper installation of any tracer wire.

D. STORM SEWERS AND APPURTENANCES

STORM SEWER PIPE

Storm sewer pipe shall conform to the following:

(1) Reinforced concrete pipe minimum Class IV in conformance with the latest revision of ASTM designation C76 with C361 or C443 flexible gasket joints, except that bituminous mastic joints may be used in grass areas.

(2) Polyvinyl Chloride (PVC) Pipe: ASTM D3034 (4-inch thru 15-inch) or ASTM F679 (18-inch thru 36-inch), rated SDR 35, continually marked with manufacturer's name, pipe size, cell classification, SDR rating. Joints shall be flexible elastomeric seals conforming to ASTM D3212.

(3) Ductile Iron Pipe (DIP) shall conform to ANSI/AWWA C151/21.5, Class 50 cement lined with push on type joints conforming to ANSI/AWWA C111/A21.11.

(4) Spiral Rib Metal Pipe Type 1R: 18-inch diameter and greater. Pipe ends shall be re-corrugated and installed with semi-corrugated Hugger type brands and "O" ring gaskets. (Only permitted with Municipality approval and/or when specifically indicated on PLANS).

(5) High Density Polyethylene Pipe (HDPE) Smooth Interior, AASHTO Designation M252 and M294, maximum diameter of 48 inches. Pipe joints and fittings shall be watertight gasketed joints. No band seals will be allowed. (Only permitted with Municipality Approval and/or when specifically indicated on PLANS).

(6) Polyvinyl Chloride (PVC) large diameter closed profile gravity sewer pipe, UNI-B-9: ASTM F794. (Only permitted with Municipality Approval and/or when specifically indicated on PLANS).

(7) Corrugated Steel (Metal) Pipe (CSP or CMP), ASTM A760, 16 gauge unless noted on PLANS. Corrugated steel pipe may be round pipe, arch pipe, or slotted drainpipe as indicated on PLANS. Slotted drainpipe shall have 1.75 inches wide drain waterway openings and 6 inches minimum height drain guide. (Only permitted with Municipality approval and/or when specifically indicated on PLANS).

Precast tees, bends, and manholes may be used if permitted by the JURISDICTIONAL GOVERNMENTAL ENTITY.

Storm sewers may be constructed with reinforced concrete pipe using only flexible gasket joints (ASTM 361 or 443) for water main crossings.

Storm sewer shall include bedding and trench backfill.

MANHOLES, INLETS & CATCH BASINS

Manholes, Inlets and Catch Basins shall be constructed in conformance with Section IIIA Manholes, etc. above. The space between connecting pipes and the wall of the manhole shall be completely filled with non-shrink hydraulic cement mortar. Frames and lids shall be Neenah or approved equal unless specified otherwise on the PLANS. All frames and grates shall be provided such that the flange fully covers the opening plus 2" of the structure as a minimum. * Provide **"Vane"** Type frame & grate for all structures located in curb where gradient exceed 2.0%. Manholes shall include steps, frame & grate, bedding and trench backfill.

FLARED END SECTION

Flared end sections shall be pre-cast reinforced concrete flared end section with an end block cast separate as per the Illinois Department of Transportation Standard 542301 and shall be installed where shown on the PLANS. All flared end sections for storm sewers 12" in diameter and larger shall be installed with a grating per Standard 542311 and/or as detailed on the PLANS. Work shall include end block.

RIP RAP

Stone rip rap consisting of pieces of "A" quality stone 4" to 8" in diameter shall be furnished and installed in accordance with IDOT Specifications and shall be placed where shown on the plans, to a minimum thickness of 12" and a width as indicated on the plans. Broken concrete or concrete blocks will not be acceptable.

FOUNDATION, BEDDING AND HAUNCHING

Foundation, Bedding and Haunching shall be wet coarse aggregate or moist fine aggregate in accordance with the above standards and placed as shown on the detail.

UNDERDRAINS

Pipe underdrains shall be corrugated flexible plastic pipe conforming to AASHTO Designation M252 perforated corrugated polyethylene pipe (PE) with a smooth interior of the diameter indicated on the PLANS and wrapped in a soil filter fabric supplied and installed by the CONTRACTOR. Perforations may be circular or slotted, but shall provide a minimum of 1.0 in2/ft of inlet area. CONTRACTOR shall submit fabric and pipe catalogue Specifications for approval by the CLIENT. CONTRACTOR shall bed and backfill the underdrain in one of the following IDOT gradations of aggregate (CA-5, CA-7, CA-11, CA-14 or CA-15).

MISCELLANEOUS

(1) All existing field drainage tile or storm sewers encountered or damaged during construction shall either be restored to their original condition, properly rerouted and/or connected to the storm sewer system.

(2) Footing drains shall be connected to sump pumps or discharged directly into storm sewers. Footing drains or drainage tile shall not be connected to the sanitary sewer.

CONNECTION FOR STORM SERVICE TO STORM MAIN

Connections of storm sewer services to storm sewer mains should be made with manufactured tees when available. Availability of manufactured tees will be a function of the storm sewer material and pipe diameter size of the service sewer and main. If manufactured tees are not reasonably available, connections should be made in accordance with manufacturer's recommendations for all storm sewer other than concrete pipe. For concrete pipe connections without manufactured tees the storm sewer main shall be machine cored and the service sewer connected using non-shrink grout for the void between pipes. The service sewer shall be cut flush with the inside wall of the sewer main and not extend into the inside flow area of the main or otherwise impede flow.

IV. ROADWAY AND PARKING LOT IMPROVEMENTS

STANDARDS

Work shall be completed in accordance with the applicable sections of the Standard Specifications for Road and Bridge Construction, Department of Transportation, State of Illinois, latest edition (hereinafter referred to collectively as the "Standard Specifications") except as modified below and except that payment will be defined as detailed in the contract documents between the CLIENT and the CONTRACTOR. Supplementing the Standard Specifications shall be the applicable sections of the latest editions of the "Supplemental Specifications and Recurring Special Provisions", the "Manual on Uniform Traffic Control Devices for Streets and Highways" and the Illinois Supplement thereto, (hereinafter referred to collectively as the "MUTCD"). Any references to "ENGINEER" in the "Standard Specifications" shall be interpreted as the CLIENT or CLIENT's Construction Representative.

SUBGRADE PREPARATION

The CONTRACTOR shall be responsible for all subgrade compaction and preparation to the lines and grades shown on the plans.

AGGREGATE BASE COURSE TYPE 'B'

Aggregate Base Course Type B shall be limited to CA-6 or CA-10 gradation. Aggregate base courses shall be proof rolled as outlined below.

PROOF ROLL

The CONTRACTOR shall proof roll the subgrade with either a 2-axle truck loaded to 27,000 lbs. Or a 3-axle truck loaded to 45,000 lbs. or as specified by the JURISDICTIONAL GOVERNING ENTITY. The CLIENT and JURISDICTIONAL GOVERNING ENTITY shall observe and approve the proof rolling of the subgrade and the base course. Proof rolling tolerances shall be a maximum deflection of 1" for the subgrade and ½" for the base course. The above criteria is intended as a maximum deflection standard and that proof rolling of a majority of the area will have less deflection than specified above. In any case of deficiency, the subgrade and/or base course shall be repaired and retested before proceeding with the pavement construction.

Pavement subgrade material shall not be removed, placed or disturbed after proof roll testing has been completed prior to the pavement construction. Additional testing will be required if the pavement subgrade is disturbed and/or material is removed from or placed on the pavement subgrade after proof rolling approval.

Trucks or heavy equipment shall not travel on any pavement subgrade after final testing prior to pavement construction.

HOT-MIX ASPHALT BASE COURSE

HMA Base Course shall meet the requirements of IDOT or N50 mix design as indicated and shown on the plans. The maximum amount of recycled asphalt pavement allowed shall be 30% in a N30 mix design and 25% in a N50 mix design.

HOT-MIX ASPHALT BINDER AND SURFACE COURSE

HMA binder and surface courses, shall be constructed to the compacted thickness as shown on the PLANS. The base course shall be cleaned and primed in accordance with the JURISDICTIONAL GOVERNING ENTITY. The surface course shall be placed after the base and courses have gone through one winter season, or as directed by the CLIENT. Before applying the surface course, the binder course shall be thoroughly cleaned and primed in accordance with the JURISDICTIONAL GOVERNING ENTITY. Prior to the placement of the surface course, the JURISDICTIONAL GOVERNING ENTITY shall examine the completed pavement, including curb and gutter, and all failures shall be corrected by the CONTRACTOR.

CONCRETE PAVEMENTS

Concrete pavements shall be constructed in accordance with American Concrete Institute Standard ACI330R-08 and as shown on the PLANS.

Slabs and driveway aprons shall be constructed with 6" x 6" - W1.4 x W1.4 welded wire fabric positioned on steel chair supports. Placing fabric during the concrete pouring operation will not be allowed.

Sawing of joints shall commence as soon as the concrete has cured and hardened sufficiently to permit sawing without excessive raveling, but no later than eight hours after the concrete has been placed. All joints shall be sawed to the depth as shown in the details and before uncontrolled shrinkage cracking take place. If necessary, the sawing operation shall occur during the day or at night, regardless of weekends, holidays or weather conditions. The CONTRACTOR shall be aware of jurisdictional noise ordinances and holiday restrictions for scheduling purposes.

The CONTRACTOR is responsible to guard fresh concrete until it sets and hardens sufficiently to prevent people from writing, walking, riding bicycles or otherwise permanently marking, defacing or causing depressions of any type in the concrete. Any concrete so marked will be removed and replaced by the CONTRACTOR at the CONTRACTOR's expense.

The CONTRACTOR shall protect the pavement against all traffic, including that of their own employees or other workers, until test specimens have attained the specified strength.

SIDEWALKS

Concrete sidewalks shall be constructed to width and thickness as shown on the PLANS. Sidewalks shall be thickened to a minimum of 6" at all driveways. All sidewalks shall be IDOT Class SI concrete, on aggregate base as shown on the detail. A ¾" expansion joint shall be provided when meeting existing sidewalk.

CURB AND GUTTER

Curb and gutter shall be as per the detail shown on the PLANS, which shall include compacted aggregate base course under the curb and gutter. All contraction and expansion joints shall be constructed as per the detail.

CONCRETE CURB AND GUTTER REMOVAL AND REPLACEMENT

The CONTRACTOR shall saw cut and remove the existing concrete curb where shown on the PLANS and install a curb of similar cross section and pavement to that removed (or depressed curb and gutter if shown on the PLANS). Upon completion of the curb and gutter any voids between the existing pavement and the new curb shall be filled with concrete to within 2" of the final surface, which is to be filled with bituminous pavement. The area behind the curb shall be filled and compacted with embankment material within 6" of the top of the new curb. The CONTRACTOR shall then restore the remaining 6" to its original condition (i.e., sod, gravel, topsoil). Where proposed curb connects to an existing curb, the existing curb shall be saw cut and then two 18" long x ¾" (#6) dowel bars shall be drilled and installed 9" into the existing and proposed curb. Bars shall be installed in a location similar to the expansion joint in the curb.

FRAME ADJUSTMENTS

The road contractor shall be responsible for making final adjustments and the setting on a bituminous mastic jointing compound all castings located in the roadway, sidewalks, and parking areas prior to construction of any curbing, sidewalk, or final surface. Any structures that needs to be lowered, or raised in excess of 4" shall be completed and the work backcharged against the underground contractor. This Contractor shall also be responsible for cleaning all of the above structures immediately upon completion of his phase of work. This work shall be incidental to the cost of the pavement.

PAVEMENT MARKING - PAINT

The CONTRACTOR shall furnish and apply painted marking lines, letters & symbols of the patterns, sizes and colors where shown on the PLANS. Paint pavement marking shall be applied in accordance with the IDOT Standard Specifications.

PAVEMENT MARKING - THERMOPLASTIC

The CONTRACTOR shall furnish and apply extruded thermoplastic pavement marking lines, letters and symbols of the patterns, sizes and colors where shown on the PLANS. Thermoplastic pavement marking shall be installed in accordance with the IDOT Standard Specifications.

QUALITY CONTROL

The CONTRACTOR shall provide all testing necessary to ensure improvements are in accordance with the project specifications and provide testing documentation that specifications were met.

DATE	REVISIONS	DRAWN BY
#	#	#

Manhard CONSULTING LTD

900 Woodlands Parkway, Vernon Hills, IL 60061 ph:847.634.5550 fx:847.634.0095 manhard.com

Civil Engineers • Surveyors • Water Resource Engineers • Water & Wastewater Engineers

Construction Managers • Environmental Scientists • Landscape Architects • Planners

RIVERWOODS ROAD RESIDENTIAL DEVELOPMENT

LINCOLNSHIRE, ILLINOIS

SPECIFICATIONS

PROJ. MGR.: JGC
PROJ. ASSOC.: DEM3
DRAWN BY: DEM3
DATE: 3-17-15
SCALE: N.T.S.

SHEET 8 OF 8

AGCLN3 #

© 2015 MANHARD CONSULTING, LTD. ALL RIGHTS RESERVED

April 10, 2015 – 09:02 Dwg Name: P:\Agcln3\dwg\Eng\Preliminary\SPECS.dwg Updated By: dmanhardiii

Return to Agenda

GRAPHIC SCALE

50 0 25 50 100 200

(IN FEET)
1 inch = 50 ft.

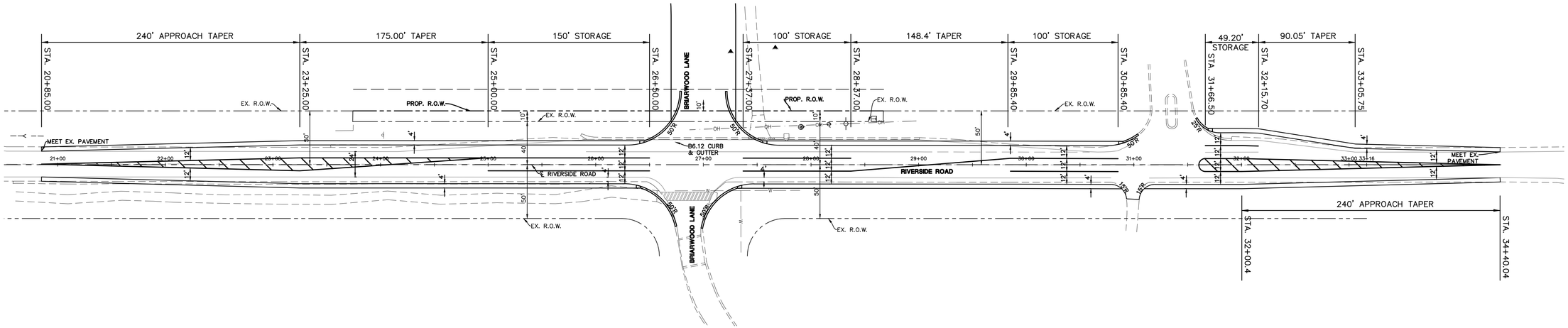

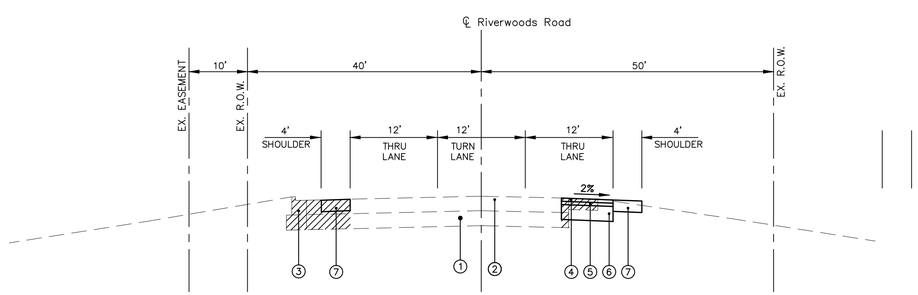

PROPOSED TYPICAL SECTION

STA. 20+85.00 to STA. 34+40.04

PAVING LEGEND

1. EXISTING AGGREGATE SUBGRADE
2. EXISTING HMA SURFACE
3. EXISTING B6.12 CURB AND GUTTER
4. HOT-MIX ASPHALT SURFACE COURSE, MIX "D", N70, 2.25"
5. HOT-MIX ASPHALT BINDER COURSE, IL-19.0, N70, 2.25"
6. AGGREGATE SUBGRADE, 12"
7. AGGREGATE SHOULDER, 6"

INDICATES REMOVAL

DATE	REVISIONS	DRAWN BY
6-12-15	REVISED PER LCDOT COMMENTS	NBA

Manhard CONSULTING LTD
800 Wiscasset Parkway, Vernon Hills, IL 60061 tel: (847) 634-9300 fax: (847) 634-0089 www.manhard.com
Civil Engineers • Surveyors • Water Resource Engineers • Water & Wastewater Engineers
Construction Managers • Environmental Scientists • Landscape Architects • Planners

PROPOSED SINGLE FAMILY SUBDIVISION
VILLAGE OF LINCOLNSHIRE, ILLINOIS
PRELIMINARY GEOMETRICS - RIVERWOODS ROAD

PROJ. MGR.: J.G.C.
PROJ. ASSOC.: N.A.
DRAWN BY: N.A.
DATE: 4-8-15
SCALE: 1"=50'

SHEET 1

AGCLN3 130640

©2012 MANHARD CONSULTING, LTD. ALL RIGHTS RESERVED

June 12, 2015 – 12:41 Dwg Name: P:\Agcln3\dwg\Eng\Preliminary\Highway\Riverwoods Road – Preliminary Geometric Plan 6-10-15.dwg Updated By: nadams

accommodate the increase in residential activity. As identified in the Transportation Map (see Maps, Chapter 10), vehicular access to the site should be provided via a curb-cut on Riverwoods Road, directly east of the existing Brookwood Farms subdivision entrance, and a second Riverwoods Road curb-cut between the Ascension of Our Lord Greek Orthodox Church and the Meadows of Birch Lake subdivision. Dual roadway access for this Area will improve traffic flow on Riverwoods Road as encouraged by Lake County Division of Transportation roadway design standards. In addition, Farrington Drive should be considered as a secondary means of vehicular accessibility to the site, linking the Meadows of Birch Lake to future residential development within this planning area and aiding in traffic circulation during periods of peak traffic flow on Riverwoods Road. An additional point of ingress/egress to the planning area from Farrington Drive will also enhance traffic safety and accessibility to both developments. While secondary street connectivity from Farrington Drive is strongly encouraged, if such vehicular connectivity is not supported, pedestrian/path access should be integrated in place of street access.

Critical Area 2

The future land use of Area 2 is of particular importance as a result of its high level of visibility and resulting level of potential impact upon the adjacent residential neighborhoods of the Whytegate, Briarwoods, Lincolnshire Woods and Manors of Brampton Woods subdivisions, which entirely surround the parcel.

Area 2 is composed of approximately 14 acres and is likely the least complicated components of this sector as a result of its minimal level of natural features and existing development. The site is composed of limited trees located immediately adjacent to the existing rural-remnant single-family residence and long rural driveway that provides access to the site via Riverwoods Road. Although there are no other natural features currently present on the site, the property no longer demonstrates indications of its former agricultural use.

Land Use Recommendation: Environmentally Sensitive Residential

The future land use and development of this planning area must be closely evaluated as a result of the potential impact that such development could have on the surrounding established residential neighborhoods of the Whytegate, Briarwoods, Lincolnshire Woods and Manors of Brampton Woods subdivisions that surround the site. The character of these adjacent residential developments lends this Area's future land use to development of "Environmentally Sensitive Residential". Although the site does not contain the extensive woodlands, tree clusters, or nature features that are generally indicative of property placed within the "Environmentally Sensitive Residential" land use classification, it is imperative that it is developed in a manner consistent with that of the existing neighborhoods to ensure uniformity, consistency and cohesion as an integrated component of the residential community upon completion. Additionally, the existing grove of trees located in the center of the northern property line is directly in line with the conservation outlot of the Whytegate Unit 3 Subdivision to the north, which further supports preservation efforts for this parcel to foster consistent in-fill development patterns.

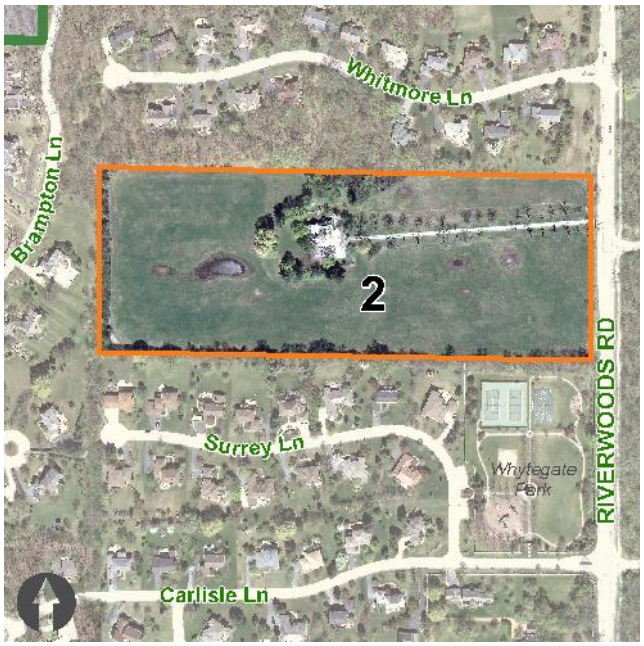

Soil borings and similar environmental analyses should be conducted to determine the existence of former or deteriorated wetlands on site to enable their potential restoration or possible expansion. Where possible, conservation outlots or private conservancy areas should be integrated into

development of the site to preserve existing trees. Ingress and egress to the planning area should be provided via a single curb-cut on Riverwoods Road, immediately opposite Briarwood Lane. Although a secondary means of accessibility to the site via a street connection to Brampton Lane was anticipated through the Village's previous planning efforts, which resulted in the dedication of right-of-way to permit an easterly roadway extension, the Village Board has previously expressed their desire to abandon this connection. However, pedestrian path connectivity should be a strong consideration in lieu of a secondary street connection to further expand the Village's path system network by creating additional routes for alternative/recreational travel.

~~Critical Area 3~~

~~Area 3 is the most significant of the seven focus areas of the East Sector with regard to land area and undisturbed natural features. As remnants of the Florsheim family farm, this planning area contains the highest amount of intact acreage (111 acres) under common ownership of all the focus areas that are identified within this sector. As a result, the acquisition of this area for future development is likely to face significant interest to developers.~~

~~This Area fronts Half Day Road, a primary arterial State roadway, and Old Mill Road, a remnant rural thoroughfare that was converted to a cul-de-sac upon the construction of the Interstate Tollway 94. A secondary point of access to Fallstone Drive is provided via the immediately adjacent Lincolnshire Woods Subdivision. Finally, Area 3 distinguishes itself from the other focus areas of this plan due to the presence of substantial natural features such as wetlands, woodlands, floodplain, and the West Fork of the North Branch of the Chicago River, which traverses the eastern boundary of the Area.~~

~~Land Use Recommendation: Environmentally Sensitive Residential~~

~~As the most environmentally sensitive of the seven focus areas within the East Sector and potential significant impact on the surrounding character of the adjacent residential neighborhoods, this planning area has been placed within the "Environmental Estate Residential" future land use classification to permit residential development of 0.5-1.0 dwelling units per acre. Residential development of this nature is consistent with the character of the Old Mill Woods subdivision and also provides the reduced density and increased sensitivity necessary to accommodate the existing natural elements of the site. This Area's contiguity to the Old Mill Woods subdivision and the Florsheim Nature Preserve will require substantial consideration of potential developmental impact on these adjacent properties. Landscape bufferyards in the form of dedicated park land or conservation outlots should be utilized along Half Day Road to mitigate the impact of traffic and preserve the semi-rural character of the Half Day Road corridor. As an indication of the exceptional level of environmental sensitivity that is maintained in this planning area, it is included in the North Branch Chicago River Watershed Plan, therefore, any development of this area should be subject to the criteria and recommendations set forth in said Watershed Plan.~~

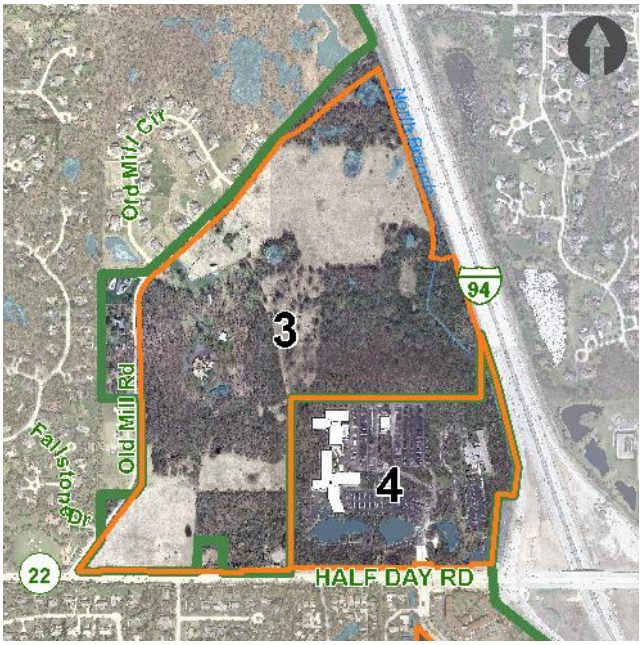

~~As identified in the Transportation Map (see Maps, Chapter 10), ingress and egress to the site should be provided via a relocated single curb-cut on Half Day Road, opposite Berkshire Lane to create a four-way intersection, with potential for traffic signalization. In order to preserve the secondary means of accessibility and interlinking roadway network currently provided by Fallstone Drive, this roadway should be extended easterly from its current terminus at Old Mill Road to enable the creation a new three-way intersection upon the northerly extension of~~

Return to Agenda

Change in Approved Single-Family Residential Subdivisions North of Route 22 - Initial Referral to Final Approval

Subdivision Name	COW Referral	Proposed Lots	Final Lots	% Change
Anvil Farms	1/11/1988	7	7	0
Bishop's Gate	1/25/1988	7	7	0
Brampton Woods	9/23/1986	18	16	-11
Briarwoods	2/6/1989	17	14	-17.6
Brookwood Farms	12/13/2004	17	9	-47
Lincolnshire Forest	7/8/2002	10	9	-10
Lincolnshire Woods - Units 1-4	10/5/1976	171	174	1.7
Manors of Brampton Woods	3/30/1989	11	10	-9
Manors of Brampton Woods - Unit 2	4/24/2006	11	11	0
Meadows of Birch Lake	7/24/1995	49	39	-20
Old Mill Woods	5/29/2001	45	27	-40
Whytegate - Unit 1	12/17/1984	29	29	0
Whytegate - Unit 2	12/17/1984	22	22	0
Whytegate - Unit 3	12/17/1984	19	19	0

Last updated 9/2015

Return to Agenda

Village of Lincolnshire

Agenda Item 3.1, ZB

REQUEST FOR BOARD ACTION
Zoning Board
May 21, 2015

Subject:	Proposed 17-lot R2A Single-Family Subdivision – Policy Phase (Mons Property at 1700 Riverwoods Road)
Action Requested:	Public Hearing of a Rezoning from the R1, Single-Family Residence District, to the R2A, Single-Family Residence District, to permit the development of an environmentally sensitive large lot subdivision.
Originated By/Contact:	Stephen Robles, Village Planner Department of Community & Economic Development
Referred To:	Zoning Board

Background:

- Arthur J. Greene Construction Company (AJ Greene) developed the Whytegate Units I, II, and III single-family residential subdivisions, along the west side of Riverwoods Road, within the Village. The three developments are separated north and south by a 14.5-acre, single lot located at 1700 Riverwoods Road (commonly known as the "Mon's Property").
- The subject parcel is zoned R1, consistent with the existing single-family residential use (the existing home and property are vacant).
- The parcel is identified as "Critical Area 2" in the Update 2012 Comprehensive Plan as a result of its high level of visibility and potential level of impact upon adjacent residential subdivisions (see Comprehensive Plan excerpt attached).

Zoning Process Summary:

- Per Lincolnshire's Zoning Code, "*the R2A Single-Family Residence District is designed to permit the development of environmentally sensitive large lot areas through the application of responsible environmental and other planning criteria. The intent is to encourage a creative approach to the use of land, preserve natural vegetation, topographic and geologic features, enhance the appearance of the neighborhoods by the conservation of forested areas, water bodies and the preservation of natural vegetation and wildlife and advance the various Lincolnshire planning policies outlined in the Official Comprehensive Policies Plan*."
- Development proposals seeking the R2A zoning designation require a two-phase review process; 1) policy phase and 2) technical phase. The two-phase review and approval process of an R2A development is unique in comparison with a standard rezoning and plat of subdivision request. In this first policy phase, the Zoning Board provides a recommendation on the proposed zoning change to the R2A District, based upon conceptual subdivisions plans. A full analysis of the proposed subdivision will not occur until the technical phase; however, any Zoning Board concerns regarding the proposed subdivision should be expressed and discussed at this time.

Environmental Features Summary:

- The developer proposes to preserve the existing wetland area located in the north-central portion of the site, which aligns and continues the existing conservation outlot in the Unit III subdivision to the north, to promote this environmentally-sensitive feature.
- The developer also proposes bioswales located in rear yards and restricted landscape easements to further enhance the environmental component of the proposed R2A subdivision.

Village of Lincolnshire

Agenda Item 3.1, ZB

Subdivision Design/Layout Summary:

- The proposed 17-lot single-family subdivision follows a similar development pattern as Whytegate Unit II (immediately north), consisting of a single vehicular entrance from Riverwoods Road, terminating in a cul-de-sac, with a walking path connection to Brampton Lane, as illustrated in the attached subdivision concept plan.
- Per R2A requirements, single-family lots shall be no smaller than 20,000 square feet, and must have an average lot size at least 22,000 square feet, which the conceptual development plans achieves.
- The proposed cul-de-sac measures 1,100' long, in excess of the maximum permitted 800 ft. length (Sec. 7-5-2(G)). Although cul-de-sacs of this length are relatively common along both sides of Riverwoods Road (north of Rt. 22), a variation from the subdivision regulations will be required as part of the preliminary plat review of the technical phase.

Density Summary:

- At the preliminary evaluation of the rezoning and subdivision requests, the Village Board requested the Zoning Board review the proposed density and look at potential for further reduction. Initially, 19 lots were proposed, which has since been reduced to 17 lots, as summarized below:

Meeting	Number of Lots	Land Area (acres)	Density (units/acre)
Feb 24th Preliminary Evaluation	19	14.5	1.3
May 21st Zoning Board	17	14.5	1.17

- Additionally, the Board requested the Zoning Board be provided the initially proposed densities of the Old Mill Woods and Brookwood Farms subdivisions for comparison (see attached Subdivision Density Comparison summary).

- The existing Whytegate units north and south of the proposed subdivision and the Manors of Brampton Woods, to the west, maintain the following densities (see attached Location Map for subdivision locations):

Subdivision	Number of Lots	Land Area (acres)	Density (units/acre)
Whytegate Unit 2	22	17.5	1.25
Whytegate Unit 3	19	14.5	1.3
Manors of Brampton Woods	10	15	0.7

- The R2A permits a density of 0.5 – 1.0 units per acre. However, the Zoning Board may recommend density premiums up to 1.25 units per acre where *"the petitioner shows special attention to protection and preservation of natural environmental resources and where the proposed development significantly advances the policy objectives of the Official Comprehensive Plan of the Village*".

- The Update 2012 Comprehensive Plan recommends rezoning of the subject property from the R1 District to the R2A District to support *"development consistent with the existing neighborhoods to ensure uniformity, consistency and cohesion as an integrated component of the residential community upon completion".* The proposed R2A zoning is not uncharacteristic with the adjacent residential developments and the proposed environmental enhancements are essential to demonstrating the environmental character of this area.

Village of Lincolnshire

Agenda Item 3.1, ZB

- **Rezoning Findings of Fact:** The attached presentation packet includes the Petitioner's response to the Findings of Fact for Rezoning for consideration by the Zoning Board.

Recommendation:
Staff recommends approval of the Policy Phase, permitting rezoning to the R2A District, for a proposed 17-lot single-family residential subdivision.

Motion:
Having made findings based on facts covered in a Public Hearing held on May 21, 2015, the Zoning Board recommends approval to the Village Board of a rezoning from the R1, Single-Family Residence District, to the R2A, Single-Family Residence District, in conjunction with approval of the Policy Phase, to permit the development of an environmentally sensitive large lot subdivision, subject to Staff's memorandum, and further subject to. . . . .

{Insert any additional conditions or modification desired by the Zoning Board}

Reports and Documents Attached:
- Location Map.
- Presentation Packet, prepared by Arthur J. Greene Construction Company and Manhard Consluting, Ltd., received May 13, 2015.
- Subdivision Density Comparison summary memo, prepared by Staff.
- Critical Area 2 Excerpt from Village of Lincolnshire Comprehensive Plan, Update 2012.

Meeting History	
Referral at Village Board (COW):	February 24, 2014
Current Zoning Board (Public Hearing):	May 21, 2015

Return to Agenda

Village of Lincolnshire
One Olde Half Day Road
Lincolnshire, IL 60069
www.lincolnshireil.gov

APPROVED Minutes of the **REGULAR MEETING OF THE ZONING BOARD** held on Thursday, May 21, 2015, in the Public Meeting Room in the Village Hall, One Olde Half Day Road, Lincolnshire, IL.

PRESENT: Chairman Manion, Members Kalina, Leider, Van de Kerckhove, and Bichkoff.

STAFF PRESENT: Stephen Robles, Village Planner.

ABSENT: Mayor Brandt.

CALL TO ORDER: **Chairman Manion** called the meeting to order at 7:03 p.m.

1.0 ROLL CALL

The roll was called by **Village Planner Robles** and **Chairman Manion** declared a quorum to be present.

2.0 APPROVAL OF MINUTES

2.1 Approval of the Minutes related to the Zoning Board Meeting held on Tuesday, April 14, 2015.

Member Van de Kerckhove moved and **Member Leider** seconded the motion to approve the minutes of the Regular Meeting of the Zoning Board, as submitted. The motion passed unanimously by voice vote.

3.0 ITEMS OF GENERAL BUSINESS:

3.1 PUBLIC HEARING regarding a rezoning from the R1, Single-Family Residence District, to the R2A, Single-Family Residence District, to permit the development of an environmentally sensitive large lot subdivision containing 17 single-family residential lots (Arthur J. Greene Construction Company).

Chairman Manion recessed the Zoning Board meeting and opened the Public Hearing. **Jeff Greene,** President of Arthur J. Greene Construction Company, introduced the proposed single-family residential subdivision associated with the R2A rezoning request and identified the proposed name would be Manors of Whytegate. He continued that A.J. Greene Construction had built the subdivisions north, south and west of the subject parcel and was originally proposed at 19 single-family lots and made adjustments to the plan, which reduced the number of lots to 17. **Mr. Greene** presented the subject site had been designed as an R2A subdivision based on such designation in the Village's Comprehensive Plan.

Glen Christensen, Land Planner with Manhard Consulting, Ltd., explained the subdivision had been designed over the past year and a half, and included comments provided by the Village Staff. He presented the current conditions of the property, the current zoning of surrounding subdivisions, and the elements of the proposed subdivision.

Member Van de Kerckhove sought clarification on the petitioner's presentation regarding the infiltration of ground water as it related to the proposed stormwater management system. **Mr. Christensen** explained the general process of stormwater management though the use of native plantings and their ability to allow infiltration of ground water due to their large root systems.

Member Leider sought further explanation why the vehicular access was not from the west or another location, and why the subdivision entrance was aligned with Briarwoods Lane to the east. He further expressed that the Briarwoods of Lincolnshire Subdivision contained larger sized single-family lots and the proposed road was essentially extending the street across Riverwoods Road; therefore, the lot sizes of the proposed subdivision should be consistent with the Briarwoods Subdivision. **Mr. Christensen** explained the proposed subdivision entrance was oriented to Riverwoods Road based on land planning and traffic management principles. As required by Lake County Department of Transportation regulations, the entrance was lined up with Briarwoods Lane to provide a suitable intersection in this area.

Chairman Manion sought verification by the petitioner to incorporate the rezoning findings of fact into the record. **Mr. Greene** confirmed.

Member Leider expressed his concern with proposed Lot 1 being located immediately adjacent to the Riverwoods Road, with no buffer or separation space like had been accomplished in the adjoining subdivision to the north. He further noted the proposed density was too much and by extending Briarwoods Lane from the west, there was no consistency with the existing lots in the Briarwoods Subdivision.

Mr. Greene explained the proposed subdivision was to fill a gap in the Whytegate Unit subdivisions, which was to match those adjacent subdivisions in design and density. However, he noted the proposed lot sizes would be slightly larger than that of the existing subdivisions to the north and south. He expressed any subdivision with larger lot sizes and reduced density would appear out of character from the existing development pattern along the west side of Riverwoods Road.

Chairman Manion questioned what the anticipated home size would be. **Mr. Greene** responded the typical home would range from 3,500 square feet to 4,000 square feet, pending customer demand. **Chairman Manion** then inquired about the expected price point of the proposed homes. **Mr. Greene** noted the anticipated price would start at one million dollars, pending market demand.

There being no further Zoning Board comments, **Chairman Manion** sought Staff's comments.

Village Planner Robles presented Staff's memorandum and explained the request was to rezone the subject site from the R1 Single-Family Residence District to the R2A Single-Family Residence District. The R2A District was designed to permit the development of environmentally sensitive large lot areas through responsible environmental preservation and other planning criteria. He continued that the intent of such zoning was to encourage a creative approach to the use of land, preserve natural vegetation, enhance the appearance of the neighborhoods by the conservation of forested areas and advance the various Lincolnshire planning policies of the Comprehensive Plan. **Village Planner Robles** explained that developments seeking

R2A zoning required a two-phase review process; the first was the policy phase and the second was the technical phase. In the first policy phase, the Zoning Board provides a recommendation on the proposed zoning change to the R2A District, based on conceptual subdivisions plans. A full analysis of the subdivision would not occur until the technical phase. However, he noted that any Zoning Board concerns regarding the proposed subdivision should be expressed and discussed during the rezoning consideration. **Village Planner Robles** continued that the parcel was identified as Critical Area 2 in the Update 2012 Comprehensive Plan due to the high level of visibility and potential level of impact upon adjacent residential subdivisions. He continued that the Comprehensive Plan recommended rezoning of the site to the R2A District to support *"development consistent with the existing neighborhoods to ensure uniformity, consistency and cohesion as an integrated component of the residential community".* The proposed R2A zoning was not uncharacteristic with the adjacent residential developments and the proposed environmental enhancements were essential to demonstrating the environmental character of this area.

There being no questions to Staff from the Zoning Board, **Chairman Manion** sought any public comments.

Steve Mikus, 306 Whitmore Lane, sought clarification of a bioswale and the types of plants used in the bioswales. **Mr. Christensen** responded that a bioswale was essentially a ditch with native plants, where the plants specifically used were mixture of native plant types that had been shown to thrive in such conditions. **Mr. Mikus** also questioned where the proposed bike paths would be located. **Mr. Christensen** pointed out on the presentation board the proposed location of the bike path starting at the west end of the cul-de-sac and extended northwest to connect with Brampton Lane within existing dedicated right-of-way. **Mr. Mikus** inquired about the average lot size, to which **Mr. Greene** responded the proposed lots were bigger than the existing Whytegate subdvisions to allow for larger homes. **Mr. Mikus** expressed his concerns over the appearance of smaller lots with larger homes compared to the adjacent subdivisions. He then inquired about the anticipated timeline of construction. **Mr. Greene** identified a two year construction window and expressed they were seeking to start construction before winter.

Ken Ainger, 316 Whitmore Lane, questioned if the developer had experience with bioswales given that sub-soils in the area were very hard and stressed his concern over standing water that may result. **Jesse Conrad,** Project Engineer with Manhard Consulting, Ltd., noted Manhard's experience in the installation of bioswales and described their function to prevent standing water. **Mr. Ainger** inquired if the installation of bioswales was something that was required to be installed. **Mr. Conrad** affirmed and noted that both Lake County Stormwater Management Commission and the Village required bioswales. **Mr. Ainger** questioned if Manhard had experience with bioswales in the immediate area. **Mr. Conrad** responded that they have not constructed any bioswales in Lincolnshire, but in surrounding communities. **Mr. Ainger** then inquired about the location of utilities and whether they would be installed within the proposed street. **Mr. Conrad** confirmed the water and sanitary service lines would be within the street right-of-way. **Mr. Greene** commented that gas and electric would be in the front of each lot. **Mr. Ainger** questioned if any trees were being removed along the north side of the proposed development. **Mr. Greene** explained that all the existing trees along the north boundary of the subdivision would remain. **Mr. Ainger** concluded by noting his concerns regarding the proposed density and of the larger building footprints compared

to the lot sizes. He also expressed that without the presence of existing woodlands, the density would feel much higher.

Harry Goldshall, 315 Whytegate Court, expressed concerns about the current stormwater drainage and standing water during rain storms. **Mr. Conrad** explained that all stormwater would be redirected east to the proposed detention basin at the southeast corner of the subdivision. **Mr. Goldshall** expressed his support over the proposed lot sizes noting they would be bigger than the surrounding subdivisions.

Susan Banas, 224 Brampton Lane, inquired as to whether there was any historic designation on the home or the property. **Mr. Conrad** responded that a historic study was currently being conducted on the property. **Mrs. Banas** expressed her concerns of the Village discussing zoning without confirmation of any historic designation. She continued noting her concern of the proposed density and number of lots related to the Riverwoods Road traffic. **Mr. Greene** responded that the proposed subdivision was intentionally designed to provide the largest lots of the subdivision at the western end, adjacent to her property, and would be near 40,000 square feet in lot area. He further expressed that traffic would be less than any other of the Whytegate subdivisions. **Mrs. Banas** noted traffic on Riverwoods Road north of Route 22 was becoming very congested. She questioned how a rain event would be handled when grading on the western lots was shown to pitch to the west towards the back of her home. **Mr. Christensen** explained that the proposed grading was designed to direct rain water away from the homes and towards the rear of the lots, which would then be funneled towards the detention basin at the front of the subdivision. **Mrs. Banas** inquired if a berm was going to be installed for those lots next to the bike path.

Julie Galassini, 311 Whytegate Court, questioned if the proposed bioswales were the same as rain gardens. **Mr. Christensen** explained the difference was that rain gardens tended to be at the end of the line, rather than bioswales that are in-line of the drainage system and clean the water before it's released. She noted that as a real estate attorney, she had observed failed bioswales and further expressed her concerns with flooding on her property that had been received from the subject property. **Mr. Christensen** noted the proposed subdivision presents the opportunity to collect the rain water and direct to the basin. **Mrs. Galassini** expressed the current traffic on Riverwoods Road was beyond the road's capabilities and would not be able to support further traffic. **Mr. Greene** pointed to the other surrounding subdivision and noted the number of homes was higher than that being proposed. **Mrs. Galassini** lastly expressed her support for the addition of berming along the southern perimeter. **Mr. Christensen** noted that they will review the landscaping plan to look for additional opportunities for screening but that berming would not solve any drainage problems.

Linda Spungen, 219 Brampton Lane, expressed her concerns regarding drainage impacting her property to the west. She continued that when she purchased her property, she understood the property across the street to the east was not buildable, and although not constructing any buildings, a bike path would be constructed and questioned how many trees would be removed. **Mr. Greene** explained the bike path was requested by the Village to provide connection between subdivisions, rather than constructing a road. **Mr. Christensen** noted that a survey of tree removal had not been conducted and they would need to review the existing tree growth before constructing the path to understand how many trees would need to be removed. **Ms. Spungen** also reiterated the traffic conditions of Riverwoods Road, especially in the morning when trying to take her children to Stevenson High School. **Mr. Greene** commented that

Riverwoods Road served as a main thoroughfare for the school buses and served a high number of outside traffic.

Mr. Mikus (306 Whitmore Lane) inquired if the Village had a zoning district for ¾ acre lots. **Village Planner Robles** explained there was no such zoning and that while the minimum lot size of the requested R2A District was 20,000 square feet, the petitioner was proposing a variety of lots sizes, including at the ¾ acre size.

Mrs. Banas (224 Brampton Lane) inquired to the location of the right-of-way and how close it was to her property line. **Mr. Christensen** responded the right-of-way was immediately adjacent to her northern property line. Minor discussion ensued regarding the right-of-way location related to **Mrs. Banas'** property, and the questioned was clarified as to the location of the bike path and how close it would be to **Mrs. Banas'** property. **Village Planner Robles** clarified the final location of the bike path had not been established as that would occur in the technical phase. He continued, since the existing right-of-way was 60 feet wide, the developer would have flexibility in placing the bike path so far as 50 feet away from her property. **Mrs. Banas** questioned who owned the property within the right-of-way. **Chairman Manion** confirmed the Village was the owner. **Member Leider** noted a similar situation of two properties on Pembroke Drive that were divided by right-of-way. In that situation, a road was built between those two properties based on the right-of-way, and that could happen on the subject property if the Riverwoods Road access was questioned and determined access should be provided from Brampton Lane. **Mrs. Banas** questioned the integrity of the zoning application being considered before determining the historical significance of the existing estate on the property. **Village Planner Robles** explained that since the property or the home was not designated as a historical landmark, the Village could consider the rezoning and subdivision request as presented. However, if during the Village's zoning review, the historical designation changes on the property, such review would need to consider any change in historical status.

Joseph Cloonan, 302 Whitmore Lane, explained the R2A zoning is for environmentally sensitive development and the proposal did not seem to provide that given removal of various wetlands. **Village Planner Robles** noted the petitioner had provided an environmental study, which identified the presence of wetlands on the property. The study noted the wetlands were under the authority of Lake County Stormwater Manager Commission and it would be their determination if the wetlands had to remain or could be remediated elsewhere. He continued, the largest wetland was being preserved and was incorporated into the proposed subdivision design. Additional discussion ensured regarding the various location and qualities of the wetlands on the subject property. **Mr. Cloonan** echoed the concerns of ratio of lot size to the home, but noted there had not been any discussion on house placement to prevent the appearance of row homes. He continued to present his concerns regarding the lack of open space within the proposed subdivision plan, and appeared to be designed with as many homes that could be placed on the property.

Member Leider requested Staff provide the audience with a description of the various single-family zoning district based and the frequency of zoning terminology used. **Village Planner Robles** explained the various single-family zoning district and their corresponding lots sizes.

Mrs. Banas inquired if there was any reason why the property could not be developed under the R1 requirements. **Village Planner Robles** noted the property is currently

zoned R1 and he did not see any reason why the property could not be developed in per the R1 regulations. However, since the Village has received an application for a zoning change to the R2A District, the Village must consider the suitability of the requested R2A zoning based on the findings of fact and consistency with the Comprehensive Plan.

Mr. Cloonan expressed his support for the Village acquiring the subject property and turning it into a natural area.

Chairman Manion sought any further comments from the public. There being no further comments, **Chairman Manion** closed the public hearing and reconvened the Zoning Board meeting.

Member Leider expressed he would not support an R2A zoning, but felt the R2 District would be suitable. He also conveyed his concerns regarding Riverwoods Road traffic and stormwater management related to the proposed subdivision.

Member Bichkoff sought clarification on comments regarding density and lot sizes based on the exhibit provided by the petitioner comparing lot sizes of surrounding subdivision, as the proposal provided the second largest average lot size. He also questioned if the development's density were cut in half, would that make that significant of impact on the Riverwoods Road traffic. Discussion ensued over comparable lot sizes and density to surrounding subdivisions and the compatibility of the proposed subdivision.

Member Van de Kerckhove commented that the proposed R2A District was consistent with past trends and the Village's Comprehensive Plan.

Member Kalina expressed his two issues regarding the request as traffic and the best use of the property. He continued that a zoning change from the R1 to the R2A District was too big of a step, which the R2 was a better step in development as there needed to be control in growth and density.

Chairman Manion commented the economic aspect of the development is part of the overall decision, and he felt the rezoning was reasonable as the proposed subdivision was consistent with the adjoining lots. He further noted that the development would not add any major amounts of traffic to Riverwoods Road.

Member Bichkoff summarized the three key issues expressed by public comment of traffic, stormwater, and historic designation that could have big impacts on development of the property and until resolved, the Zoning Board may be spinning its wheels. **Member Van de Kerckhove** noted that traffic and stormwater are technical issues that would be addressed during the technical review of the subdivision.

Chairman Manion sought any further comments from the Zoning Board. **Member Leider** expressed his support of a zoning to the R2 District. **Member Van de Kerckhove** commented the application met the standards of the R2A District. **Member Kalina** expressed that R2A seem, begrudgingly, reasonable.

There being no further comments, **Chairman Manion** sought a motion from the Zoning Board.

Return to Agenda

Member Van de Kerckhove *moved and* ***Member Bichkoff*** *seconded a motion to recommend approval to the Village Board, based on facts covered in a Public Hearing held on May 21, 2015, of a rezoning from the R1, Single-Family Residence District, to the R2A, Single-Family Residence District, in conjunction with approval of the Policy Phase, to permit the development of an environmentally sensitive large lot subdivision, subject to Staff's memorandum.*

The roll call vote was as follows:

Ayes: Chairman Manion, Members Van de Kerckhove, Bichkoff, and Kalina.
Nays: Member Leider.

4.0 UNFINISHED BUSINESS (None)
5.0 NEW BUSINESS (None)
6.0 CITIZENS COMMENTS (None)
7.0 ADJOURNMENT

There being no further business, **Chairman Manion** sought a motion for adjournment. **Member Kalina** moved, and **Member Van de Kerckhove** seconded the motion to adjourn. The meeting adjourned at 9:10 p.m.

Minutes Submitted by Stephen Robles, Village Planner

Return to Agenda

From: Cynthia Anderko <cynthiaanderko@sbcglobal.net>
Sent: Wednesday, May 13, 2015 3:04 PM
To: Stephen Robles
Subject: Zoning changes

After reviewing the plans for the proposed development on River woods Road, I would like to see a development of no more than 12 homes with expanded green space. The current proposal for 17 homes is too congested with not enough open space. Lincolnshire can and should do better than the current proposal. Rezoning is a serious matter with long term ramifications. The long view should be taken. Let us keep Lincolnshire as beautiful and green as possible. Thank you for bringing our views to the hearing.
Dr and Mrs Mark Anderko

Return to Agenda

Village of Lincolnshire

Agenda Item 3.21 COW

REQUEST FOR BOARD ACTION

Subject:	Official Announcement of Estimated Amount to be Raised by Ad Valorem Taxes for the 2015 Tax Levy to be Collected in Fiscal Year 2016 (Village of Lincolnshire)
Action Requested:	PUBLIC ANNOUNCEMENT - Consideration of Property Tax Estimate (No Formal Action Necessary)
Originated By/Contact:	Michael R. Peterson, Finance Director
Referred To:	Village Board

Summary / Background:

Pursuant to State Statute, the Village is required to estimate the funds to be raised from taxes on real property in the Village prior to the adoption of the levy. State law requires the Village Board declare during a public meeting, an estimate of the expected property tax levy for 2015. This announcement must be performed no less than twenty (20) days prior to the adoption of the official tax levy. This year the adoption of the tax levy ordinance is expected to take place on December 14, 2015.

Staff is in the process of finalizing the development of the proposed budget for Fiscal Year 2016. The proposed FY2016 Budget reflects a 2015 estimated property tax levy of $1,425,500. The property tax revenue reflected in the Proposed 2016 Budget will be used to fund pension contributions for Social Security ($223,950), Illinois Municipal Retirement Fund (IMRF) ($368,000) and Police Pension Fund ($833,550).

Village staff estimates the total estimated taxable assessed value in Lincolnshire has increased nearly 5% or approximately $27.9 million compared to the previous year. To take advantage of the increase in assessed valuation, staff recommends a total property tax levy of $1,425,500. The levy would be split based upon $883,550 to the Police Pension Fund and $368,000 to IMRF and $223,950 to Social Security. The amounts levied for each retirement fund will be similar to the numbers reflected in the draft 2016 Budget. Please note, the levy amount for Police Pension has been increased from the Police Pension Board's requested $783,607 to $883,550. This increase is proposed to reflect the additional anticipated tax revenue received due to the increase in assessed value being directed as an additional contribution to this retirement fund to offset decline in funded status this past year. In the current year, an additional contribution was made to IMRF per direction of the Village Board during the budget discussions for the 2015 Budget last year.

	2014 Tax Extension	**2015 Tax (Proposed Budget)**	**Difference**
Assessed Value	$563,549,256	$591,478,551	$27,929,295
IMRF	$519,000	$368,000	-$151,000
Police Pension Fund	$623,302	$883,550	$260,248
Social Security	$216,002	$223,950	$7,948
Tax Rate	**.241**	**.241**	**No Change**

Return to Agenda

Village of Lincolnshire

Agenda Item 3.21 COW

As was done for the 2013 and 2014 Tax Levies, staff will work with the Lake County Clerk's Office prior to the final levy setting to ensure the same tax rate is maintained for 2015 as was done in 2014, 2013 and 2012. This will be the fourth consecutive year of maintaining a stable tax rate for the Village of Lincolnshire.

In accordance with statutory requirements, the 2015 tax levy ordinance will be included on the agenda for consideration at the November 23, 2015 Village Board Committee of the Whole meeting for referral and December 14, 2015 Regular Village Board meeting for consideration and approval.

This is an estimate and does not limit the Board's ability to levy a different amount provided it is in compliance with the Truth in Taxation Law and all applicable notice and hearing provisions.

Budget Impact: The proposed levy will be reflected in the 2016 proposed budget as Property Tax Revenue.

Service Delivery Impact:

Recommendation: Consideration and discussion of proposed levy.

Reports and Documents Attached: none

Meeting History	
Initial Referral to Village Board:	**10/13/2015 COW Meeting**
Ordinance First Reading:	**11/24/2015 COW Meeting**
Tax Levy Ordinance Approval:	**12/14/2015 Regular Meeting**

Return to Agenda

Village of Lincolnshire

Agenda Item 3.22 COW

REQUEST FOR BOARD ACTION

Subject:	Amendment to Police Pension Funding Policy
Action Requested:	Consideration and Discussion of Amendment to Police Pension Funding Policy
Originated By/Contact:	Michael Peterson, Finance Director Brad Burke, Village Manager
Referred To:	Mayor and Village Board of Trustees

Summary / Background:
At the December 8, 2014 Village Board meeting, members of the Board approved a Police Pension Funding Policy in preparation of compliance with *Statement of Governmental Accounting Standard 67 (GASB 67): Accounting and Financial Reporting for Pensions.*

Based upon Village Board feedback on November 24, 2014, staff included language in the approved policy stating the Village Board maintains clear flexibility in determining the annual contribution amounts to the Police Pension Fund. The proposed amendments to the funding policy make no change in this regard.

The following assumption changes have been recommended by the actuary:

1. Retirement Rates, Termination Rates and Disability Rates to be updated to align with the formal study commissioned by the Illinois Department of Insurance. This study used actual experience from all Police Plans in Illinois to derive experience based assumptions.

2. The Healthy Lives Mortality assumption to be updated from the RP-2000 Combined Healthy Mortality Table (male) with blue collar adjustment and with a 200% load for participants under age 50 and 125% for participants age 50 and over to the RP-2000 Combined Healthy Mortality Table with a Blue Collar adjustment, projected to 2015 using Scale BB.

3. The Disabled Lives Mortality assumption to be updated from the RP-2000 Combined Healthy Mortality Table (male) with blue collar adjustment and with a 200% load for participants under age 50 and 125% for participants age 50 and over to the RP-2000 Disabled Mortality Table, projected to 2015 using Scale BB.

4. The disability incidence in the line of duty assumption to increase from 15% to 70%.

If the Village Board supports the policy amendment, the final version will be incorporated into the Fiscal Year 2016 Budget. Annually, as part of the budget process, the Village Board will have the ability to review the policy along with the other financial policies of the Village outlined in the budget document.

Recommendation:
Staff recommends accepting the actuary's recommendation and incorporating the amended fiscal policy language into the 2016 Budget.

Return to Agenda

Village of Lincolnshire

Agenda Item
3.22 COW

Reports and Documents Attached:

- Proposed Police Pension Fund Policy

Meeting History	
Initial Referral to Village Board (COW):	**October 13, 2015**
Regular Village Board Meeting:	**October 26, 2015**

Return to Agenda

Village of Lincolnshire
Funding Policy for
Lincolnshire Police Pension Fund

I. INTRODUCTION

The purpose of this policy statement is to define the manner in which the Village of Lincolnshire funds long-term cost of benefits promised to plan participants and defines the calculation of Lincolnshire's "actuarially determined contribution" (ADC) to the Police Pension.

The ultimate goal of this policy is to ensure pension benefits can be paid, employer costs can be managed, and the plan to fund pensions is clear.

II. GENERAL FUNDING POLICY OBJECTIVES

The fundamental financial objective of a public employee defined benefit pension plan is to fund the long-term cost of benefits provided to the plan participants. To assure the plan remains sustainable, the plan should accumulate adequate resources for future benefit payments in a systematic and disciplined manner during the active service life of the benefitting employees.

- Actuarially Determined Contributions
- Funding Discipline
- Intergenerational Equity
- Contributions as a Stable Percentage of Payroll
- Accountability and Transparency

A. ACTUARIALLY DETERMINED CONTRIBUTIONS

A pension funding plan should be based upon an actuarially determined contribution (ADC) incorporating both the cost of benefits in the current year and the amortization of the plan's unfunded actuarial accrued liability.

SPECIFIC POLICY ASSUMPTIONS

1. FUNDING METHODOLOGY	Entry Age Normal Cost Method
2. AMORTIZATION METHOD	100% of the UAAL is amortized according to a Level Dollar method
3. AMORTIZATION PERIOD	"Closed" 30 year period beginning Jan. 1, 2011 for Tax Years 2014-2025, "Open" 15 Year period for Tax Year 2026 and thereafter.
4. ACTUARIAL ASSET METHOD	Investment gains and losses are smoothed over a 5 year period.
5. FUNDING POLICY TARGET	100%
6. INFLATION	2.50% per year

Return to Agenda

7. COST-OF-LIVING ADJUSTMENT	Tier 1: 3.00% per year after age 55. Those that retire prior to age 55 receive an increase of 1/12 of 3.00% for each full month since benefit commencement upon reaching age 55. Tier 2: 1.25% per year after the later of attainment of age 60 or first anniversary of retirement.
8. ADMINISTRATIVE EXPENSES	Expenses paid out of the fund other than investment-related expenses are assumed to be $35,000 per year.
9. RATE OF RETURN	6.5% per year compounded annually, net of investment related expenses.
10. SALARY INCREASES	Rates vary by age from 24 to 55, with level increases after age 55.

Age	Rate
25	7.36%
30	5.48%
35	4.53%
40	4.02%
45	3.81%
50	3.68%
55	3.62%

11. PAYROLL GROWTH	None assumed. Level dollar amortization
12. MORTALITY	RP-2000 Combined Healthy Mortality with a blue collar adjustment, projected to current year using Scale BB.
13. DISABLED MORTALITY RATE	RP-2000 Disabled Retiree Mortality, projected to the current year using Scale BB.
14. DISABILITY RATE	70% of the disabilities are assumed to be in the line of duty.
15. MARITAL STATUS	85% of police officers are assumed to be married.
16. SPOUSE'S AGE	Males are assumed to be 3 years older than females.
17. CENSUS DATA	Collected as of measurement date *Example: 12/31/2014 for fiscal year 2015*
18. MEASUREMENT DATE OF THE NET PENSION LIABILITY	12/31 (ie: fye2014 will be measured 12/31/2014)
19. RETIREMENT & TERMINATION RATES	Based on Department of Insurance study using actual experience from all Police Pension Plans in Illinois

Return to Agenda

DISCUSSION

1. Adequacy: Lincolnshire strives to fund the obligation for benefits using assumptions that are estimated to be realizable 50% of the time.

2. Measurement of the actuarial value of assets: In a 5-year smoothed market method, the current market value of assets is reduced (increased) for the current year and each of three succeeding years, by a portion of the gain/(loss) in market value during the prior year. Such gain/(loss) is determined as the excess/ (deficit) of the current market value of assets over the market value of assets as of the prior year, increased to reflect interest at the actuarial rate and adjusted to reflect contributions and benefit payments during the prior year. The portion of such gain/(loss) by which the current market value of assets is reduced (increased) shall be 80% in the current year, 60% in the first succeeding year, 40% in the second succeeding year and 20% in the third succeeding year. Additionally, in accordance with government accounting standards, the actuarial value of assets excludes any contributions receivable on the reporting date.

3. The Date of the actuarial valuation used to determine the total pension liability information about changes in assumptions or other inputs/benefits basis for determining employer contributions. Lincolnshire Police Pension Fund's Actuarial Valuation shall be stated as of January 1 of the current fiscal year (i.e.: Actuarial Valuation as of January 1, 2015 for Fiscal Year Ending December 31, 2015).

B. FUNDING DISCIPLINE

A commitment to make timely, actuarially determined contributions to the retirement system is needed to ensure sufficient assets are available for all current and future retirees.

SPECIFIC POLICY OBJECTIVES AND CONSIDERATIONS

1. EMPLOYER CONTRIBUTIONS- Property Tax Receipts will be direct deposited from the Lake County Treasurers Office to the Lincolnshire Police Pension Fund.

2. EMPLOYEE CONTRIBUTIONS- Employee contributions obtained through payroll deduction will be electronically transferred to the Police Pension Fund no later than the employee check date.

C. INTERGENERATIONAL EQUITY

Annual contributions should be reasonably related to the expected and actual cost of each year of service so the cost of employee benefits is paid by the generation of taxpayers who receives services from those employees.

SPECIFIC POLICY OBJECTIVES AND CONSIDERATIONS

Fully funding pension benefits over the actuarial period reasonably aligns the cost of the benefits of the public services with the taxpayers who benefit from those services.

Return to Agenda

D. CONTRIBUTIONS AS A STABLE PERCENTAGE OF PAYROLL

Contributions should be managed so employer costs remain consistent as a percentage of payroll over time.

E. ACCOUNTABILITY AND TRANSPARENCY

Clear reporting of pension funding should include an assessment of whether, how, and when the plan sponsor will ensure sufficient assets are available for all current and future retirees.

SPECIFIC POLICY OBJECTIVES AND CONSIDERATIONS

1. A copy of the annual actuarial valuation for the Lincolnshire Police Pension Fund shall be made available to the Pension Board and Village Board per 40 ILCS 5/3-143.

2. The Village's Annual Financial Report shall be published on its website; uploaded to the State of Illinois Comptroller's Office; and hard copies will be available at Village Hall, Lake County Clerk's Office, and Vernon Area Public Library. This report includes various financial reports related to the Lincolnshire Police Pension Fund and the Village's annual contribution to the Pension Fund.

3. The Village's Annual Budget shall be published on its website; hard copies will be available at Village Hall, Lake County Clerk's Office, and Vernon Area Public Library. The Budget shall include the Village's contribution to the Lincolnshire Police Pension Fund as well as this Funding Policy.

III. REVIEW OF FUNDING POLICY

Funding a defined benefit pension plan requires a long-term horizon. Assumptions and inputs into the policy should focus on long-term trends, not year-to-year shifts in the economic or noneconomic environments. Generally, assumptions or inputs should be evaluated and changed if long-term economic or non-economic inputs have fundamentally changed or are no longer reasonable. As such, the Village will review this policy at least every three years to determine if changes to this policy are needed to ensure adequate resources are being accumulated in the Lincolnshire Police Pension Fund. The Village reserves the right to make changes to this policy at any time if it is deemed appropriate.

Return to Agenda

Village of Lincolnshire

Agenda Item 3.31 COW

REQUEST FOR BOARD ACTION
Committee of the Whole Meeting
October 13, 2015

Subject:	Consideration and Discussion of a Joint Purchasing Agreement with Compass Minerals Incorporated in the Amount of $28,176.00, and Cargill Incorporated in the Amount of $13,556.00, for the Purchase of Rock Salt for the 2015-2016 Winter Season
Action Requested:	Consideration, Discussion and Placement on the October 26, 2015 Consent Agenda for Approval
Originated By/Contact:	Bradford H. Woodbury, Public Works Director
Referred To:	Mayor and Board of Trustees

Summary / Background:
The Public Works Department recently received the Lake County Cooperative Purchase Contract and the State of Illinois Department of Central Management Services Joint Purchasing Contract for bulk rock salt for the 2015-16 Winter Season. The Village's supplier through the Lake County Joint Contract will remain Compass Minerals and the State program supplier will be Cargill Inc. Staff proposes the purchase of 400 tons from Compass Minerals and 200 tons from Cargill to ensure an adequate supply for the coming season.

Budget Impact:
Staff is required to provide an estimated quantity to be purchased for both of these programs in March of each year. The Lake County contract was eligible for renewal, while the Village's estimated quantity for the coming year was put out to bid through the State joint purchase process. Fearing a significant cost increase via the state joint purchase contract, Staff elected to increase the Lake County quantity and decrease the amount purchased via the State joint purchase contract.

The unit price of $70.44 from Compass Minerals represents no change in price per ton from the previous year. The unit price per ton of $67.78 represents a $15.44 increase from last year's price through the State program. The proposed FY 2016 budget includes funds of $50,000 for rock salt. The line item remains unchanged from FY 2015. The total of these two contracts is $41,732.00. Per the terms of both contracts, the Village is committing to purchasing between 80% and 120% of its 600 ton allocation. Should the Village need the 120%, the total expended would be $50,078.40. The Village currently has 450 tons in storage for the upcoming winter. These contracts coupled with the stored tonnage totals between 930 (80%) and 1,170 (120%) tons of rock salt available for snow and ice control for the season. Last winter, approximately 590 tons of salt was used for 20 events.

Return to Agenda

Village of Lincolnshire

Agenda Item
3.31 COW

Service Delivery Impact:
Allocating this amount ensures the Village an adequate supply of rock salt at the best possible price should a shortage of material occur.

Recommendation:
The Public Works Department recommends that the Village of Lincolnshire accept the Lake County and State of Illinois Joint Purchasing Agreements for rock salt with Compass Minerals Incorporated for 400 tons at $70.44 per ton and Cargill Incorporated for 200 tons at $67.78 per ton.

Reports and Documents Attached:
- CMS Contract and Requisition
- Lake County Contract

Meeting History	
Initial Referral to Village Board (COW):	**October 13, 2015**
Regular Village Board	**October 26, 2015**

Return to Agenda

CMS

ILLINOIS Bruce Rauner, Governor
DEPARTMENT OF CENTRAL MANAGEMENT SERVICES
Tom Tyrrell, Director

August 15, 2015

FILE COPY

200 tons base

Dear Joint Purchasing Participant:

Subject: 2015 - 2016 Rock Salt, Bulk Contract Information

In completing the 2015 – 2016 Rock Salt season contract re-procurement, the State of Illinois did not encounter the types of supply-related issues experienced in the previous seasons. We have made every effort to secure Road Salt at the best available price for participants in our contract solicitation, and gladly report the State was able to obtain an offer for your location requirements through the State's procurement efforts.

We again recommend that participating agencies and governmental entities examine their application rates and roadway priorities in order to minimize next season's maintenance program cost while also ensuring the safety of the public.

Enclosed is a copy of the requisition you submitted to us for the purchase of rock salt. The information from the requisition, including purchase commitment, can be used to submit your requirements to this year's contract vendor:

Contract: PSD 4018144
Cargill Incorporated Salt Division
24950 Country Club Blvd., # 450
North Olmsted, OH 44070
Phone (800) 600-7258

Term: August 2015 – August 2016
FEIN Number: 41-0177680

Contact: Government Services

Your unit is **Contract Line No:** 178 / **Price per ton** F.O.B. destination, is $. 67.78
Emergency pickup of salt from vendor's warehouse is not made available in this contract.

The additional price per ton to have rock salt delivered in trucks equipped with coal/grain chute openings in the tailgate to permit controlled off-loading of rock salt onto conveyors was not provided for by this vendor in this season's procurement process.

You are responsible for issuing your own purchase order document to the vendor. Orders may be placed with the vendor via telephone, with a written or fax confirmation to follow immediately. ***You are strongly encouraged to order and store as much salt as possible in order to help prevent potential salt shortages this winter.*** Also, you must place orders in full truckload (typically 22-25 tons) delivery quantities or multiples of such.

801 Stratton Office Building, 401 South Spring Street, Springfield, IL 62706
Printed on Recycled Paper

Return to Agenda

FILE COPY

ILLINOIS

JOINT PURCHASING REQUISITION
CY'15-'16 New Purchase Commitment

PLEASE RETURN TO:
Illinois Department of
Central Management Services
801 Wm. G. Stratton Building
401 S. Spring Street
Springfield, IL 62706
Fax: (217) 782-5187
Email Address for submission:
CMS.BOSS.EC@illinois.gov

_____ **No Thank You,** But keep on mailing list.

Opt-Out-> Our unit **does not want to participate** in the CY' 2015-2016 Contract Procurement.
Notice:-> Please complete and return the Contact information below to remain on the mailing list.

Joint Purchasing #: L3150-3150

Date: 03 / 13 / 2015

Government Unit: Village of Lincolnshire

Mailing Address: One Olde Half Day

City / State / Zip: Lincolnshire, IL 60069

County: Lake

Contact Person: Brad Woodbury

Telephone Number: 847.913.2381

Fax Number: 847.913.0869

Contact Email: bwoodbury@lincolnshireil.gov

Delivery Point
(Provide Delivery Details To Contract) (Vendor At Time Of Order Placement)
Village of Lincolnshire 205 Schelter Road Lincolnshire, IL 60069
<- Please provide Email Address bwoodbury@lincolnshireil.gov

13140

* * * * * * * * * * * * * **Participant, Complete Only One - Either "Table-A" or "Table-B" Below** * * * * * * * * * * * * *

Table A: Complete this table to have the State "SOLICIT BIDS" for your governmental entity

ITEM DESCRIPTION	BID QUANTITY	UNIT MEASURE
AASHTO M143 Road Salt or Equivalent	(Total Tonnage)	(22 – 25 Ton / Truck)
Rock Salt, Bulk	200	**Tons**

Please note your **Purchase Commitment Percentage** for **Total Tonnage Quantity** as stated above (choose one): 178

OPTION 1 X 80% minimum purchase requirement/120% maximum purchase requirement
OPTION 2 _____ 100% minimum purchase requirement/120% maximum purchase requirement

Cargill 67.78

* * * * * * * * * * * **Participant, Complete Only One - Either "Table-A" Above or "Table-B" Below** * * * * * * * * * * *

Table B: Complete this table to have the State "RENEW" Requirements for your governmental entity

ITEM DESCRIPTION	QUANTITY	UNIT MEASURE
AASHTO M143 Road Salt or Equivalent	(Total Tonnage)	(22 – 25 Ton / Truck)
Rock Salt, Bulk	_____	**Tons**

Note: Renewal is available ONLY under Contracts PSD 4017724, 4017725, or 4017726 for the CY' 2015-2016 season. Your quantity may not exceed more than a 20% increase of last season's quantity, and price cannot increase more than 10.% of last season's price. Other Terms & Conditions of Contract will remain the same as last year. Please Check Contract # Below:
Note Current CMS Contract Number: PSD 4017724 (___) -or- PSD 4017725 (___) -or- PSD 4017726 (___)

I certify that funds are available for the purchase of the items on this Requisition and that such items are for the sole use of this governmental unit, and not for personal use of any official or individual or re-sale.

In addition, I agree to abide by the Joint Purchasing Procedure established by the Department of Central Management Services.

SIGNATURE OF AUTHORIZED OFFICIAL OR AGENT

Public Works Director
TITLE

Printed on Recycled Paper

CMS
ILLINOIS Bruce Rauner, Governor
DEPARTMENT OF CENTRAL MANAGEMENT SERVICES
Tom Tyrrell, Director

Deliveries of rock salt containing any foreign material such as mud, rocks, grader teeth, wood, tarpaulins, etc., may be rejected at the delivery site. In the event that any foreign material is discovered in dumped deliveries, the salt and foreign matter may be reloaded onto the cartage hauler's truck by the local governmental unit and returned for credit, or the vendor shall immediately ship a specification compliant load of replacement salt, or issue a refund to the governmental unit consistent with the contract price.

In December 2015, the contract vendor shall have in place stockpile(s) located in or near Illinois covering the tonnage awarded for the northern regions of the State, and in January of 2016 the contract vendor shall have in place stockpile(s) in or near to Illinois covering the total tonnage awarded for all regions of the State. At our discretion, we will inspect the stockpiles to ensure that these stockpiles are in sufficient quantities, and that vendor commitments to the stockpiles are with the users of this contract.

Enhanced rock salt 2015 - 2016 season availability:

The Department of Central Management Services surveyed vendors for availability of an enhanced rock salt option in the invitation for bid, and received an offering from Cargill Salt Division. Locations interested in this enhanced salt option must call the vendor for product availability information and to facilitate potential ordering arrangements.

Their product is made available to any joint purchasing participant awarded in the Cargill Salt Division Contract as an up-charge per ton option and would be added to your order as a separate line item. Contact Roger Wilson Pone: 920-889-3583 for salt availability details.

The enhanced salt product features additional pre-treatment of approved road salt with a product providing enhanced melting performance, with reduced corrosion and clumping.

It is hoped that this information will be beneficial to you in the utilization of this contract. If you have any further questions concerning the rock salt contract, please feel free to contact me at (217) 782-8091.

Sincerely,

Wayne Ilsley, CBBP, Buyer
Bureau of Strategic Sourcing

GovSalt.doc

FILE COPY

801 Stratton Office Building, 401 South Spring Street, Springfield, IL 62706
Printed on Recycled Paper

Return to Agenda

Compass Minerals

400 Tons base

FILE COPY

August 28, 2015

SCOTT PIPPEN
VILLAGE OF LINCOLNSHIRE
PUBLIC WORKS DEPT
ONE OLDE HALF DAY RD
LINCOLNSHIRE, IL 60069-3035

Customer #: H703923

Scott,

Compass Minerals America Inc. appreciates the opportunity to service your deicing salt requirements for the upcoming season.
Your orders, whether delivered or pickup, should be placed directly with the following depot:

Depot	Order Contact
Milwaukee, WI Compass Minerals 2001 S Lincoln Memorial Dr Milwaukee, WI 53207	Shirley/Bo/Tom Tel: 414-482-3434 Fax: 414-482-4451 Hours: 7:00 A.M. - 3:00 PM Toll Free Depot # 1-800-592-6612

Ship To: Village of Lincolnshire
One Olde Half Day Road
Lincolnshire, IL 60069

Destination #: H757018

Maintaining a sufficient supply of deicing salt is an important step towards a successful winter maintenance program. Frequent and early ordering ensures you have inventory on hand to meet the next snowfall and assists your servicing facility in arranging deliveries at a time convenient to your operation.

If you would like to receive a shipment notification via e-mail as trucks are shipping, please e-mail masterdata@compassminerals.com with the Destination number(s) and recipient e-mail address per destination.

Compass Minerals America Inc. recognizes the importance of safe and clean roads. The goal of our organization is to consistently exceed your service and product quality expectations. Please help us to serve you better by contacting the Highway Sales Department at (800) 323-1641 (24 hr. message service) or by Fax at (913 338-7945) with any questions or comments. Also, if any of the above customer information is incorrect or has changed, please notify us. Thank you again for your business!

Sincerely,
Compass Minerals America Inc.
Highway Sales Department

Return to Agenda

FILE COPY

LakeCounty

Purchasing

18 North County Street – 9th Floor
Waukegan, Illinois 60085-4355
Phone: 847-377-2992
Fax: 847-377-5889

DATE: April 10, 2015

TO: Scott Pippen - Village of Lincolnshire

FROM: RuthAnne K. Hall, CPPO

RE: Lake County Bulk Rock Salt Contract #14040

This correspondence confirms that your entity has been included as part of the second year of the Lake County Bulk Rock Salt Contract #14040. Lake County currently maintains the contract with Compass Minerals, formerly North American Salt, through the snow season of 2015 through 2016. Below is the confirmation of the contact information provided, delivery location, estimated tons, and price per ton that has been included as part of the contract modification for year two of the contract.

Contact Information	Delivery Location	Estimated Tons	Price Per ton
Scott Pippen 847.913.2382 spippe@village.lincolnshire.il.us	One Olde Half Day Road Lincolnshire, IL 60069	400	$70.44

Please note: all entities are required to issue their own purchase orders directly to the vendor for the estimated quantity and price noted above. All purchases and payments made under this contract shall be between the requesting entity and the vendor directly. The vendor agrees that Lake County shall not be responsible in any way for purchase orders or payments made by the other participating entities. The vendor and participants further agrees that all terms and conditions of the contract shall continue in full force and effect to all participating entities during the second term of the contract. The credit or liability of each entity shall remain separate and distinct. Disputes between entities and the vendor shall be resolved between the immediate parties. If additional terms and conditions are negotiated separate from the Lake County contract, they shall be reduced to writing and signed by a duly authorized representative of both the vendor and respective entity.

The vendor shall provide the other governmental units with all required documentation set forth in the solicitation including but not limited to: performance and payment bonds, Certificates of Insurance naming the respective governmental unit as an additional insured and certified payrolls to the other governmental unit as required.

Vendor contact information is as follows:

Sean Lierz
Compass Minerals
Office: 913-344-9330
E-mail: lierzs@compassminerals.com